CALICO

CALIFORNIA INSTRUMENTS CORPORATION

3511 MIDWAY DRIVE / SAN DIEGO, CALIFORNIA 92110

MP MASTER

MA28067

CALIFORNIA INSTRUMENTS CORPORATION
3511 Midway Drive
San Diego, California 92117

May 1969
Original
CALICO

INSTRUCTION MANUAL

8300 SERIES DIGITAL MULTIMETER

8300-490

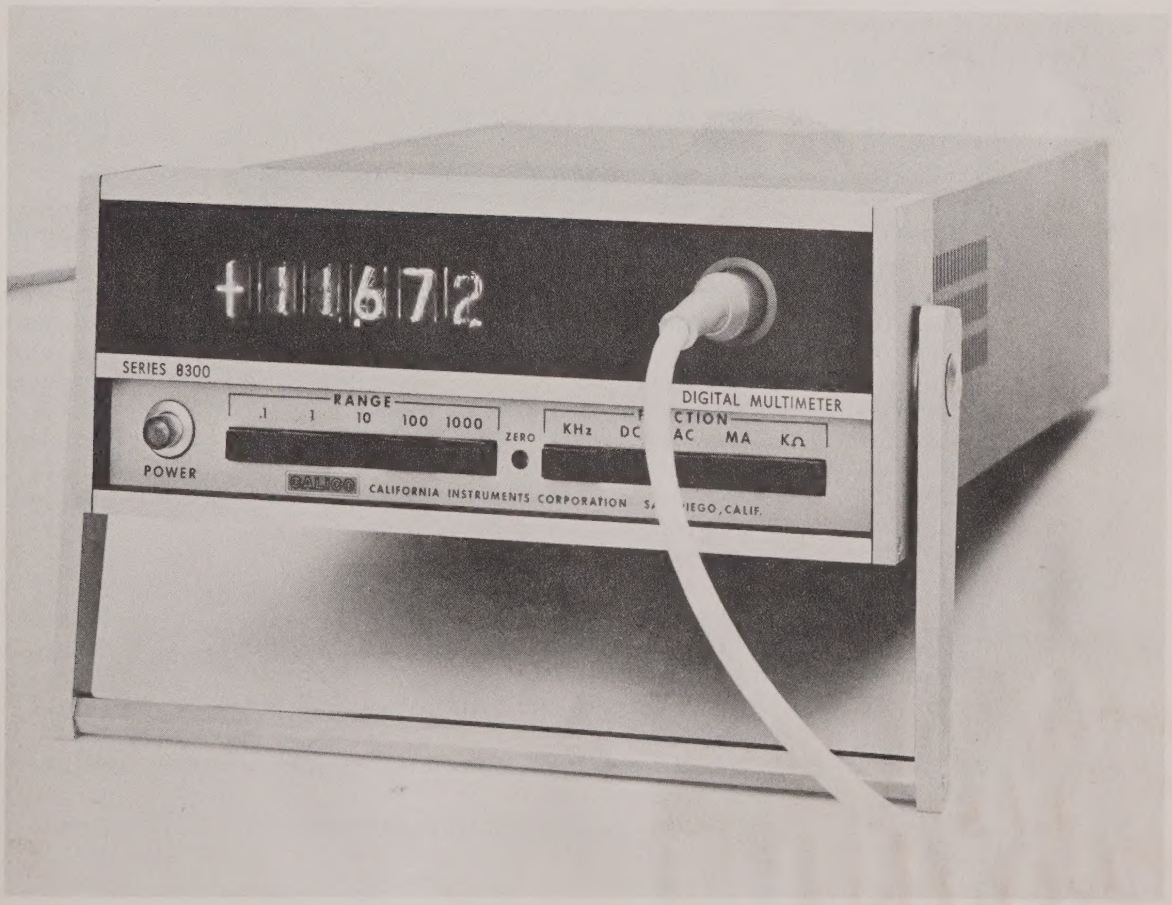

FIGURE 1.

LIST OF ILLUSTRATIONS

Figure	Title	Page
1	MODEL 8300	Frontispiece
2	BLOCK DIAGRAM, DC VOLTMETER	7
3	INTERNAL WAVE FORMS	8
4	TRUTH TABLE (Exclusive or Gate)	13
5	ADJUSTMENTS and TEST POINTS LAYOUT	19
Appendix B		
1	BLOCK DIAGRAM, ACCEPTANCE TEST PROCEDURE	B1
2	BLOCK DIAGRAM, AC CONVERTER	B2
3	BLOCK DIAGRAM, COMMON MODE REJECTION	B7
Appendix C		
1	BLOCK DIAGRAM, ACCEPTANCE TEST PROCEDURE	C1
2	BLOCK DIAGRAM, OHMMETER	C1
3	BLOCK DIAGRAM, RESOLUTION TEST	C4
Appendix D		
1	BLOCK DIAGRAM, FREQUENCY BOARD	D2
2	TIMING DIAGRAM	D3
Appendix E		
1	BLOCK DIAGRAM, CURRENT SHUNT	E1
Appendix F		
1	BLOCK DIAGRAM, ACCEPTANCE TEST PROCEDURE	F1
2	BLOCK DIAGRAM, AC CURRENT	F2
3	BLOCK DIAGRAM, CALIBRATION PROCEDURE	F3

LIST OF DRAWINGS

Sub/Assy Ref. Des.	Drawing Number	Title	Location
---	8300-400	Unit Assembly	Basic Manual
A1	8300-702	Master Board Assembly	Basic Manual
	8300-070	Schematic	Basic Manual
A2	8300-700	Analog and Decade Board Assembly	Basic Manual
	8300-071	Schematic -- Three Sheets	Basic Manual
A4	8300-708	Ohms Converter Board Assembly	Appendix C
	8300-078	Schematic	Appendix C
A5	8300-706	Current Board Assembly	Appendix E
	8300-076	Schematic	Appendix E
A6	8300-709	AC Converter Board Assembly	Appendix B
	8300-079	Schematic	Appendix B
A7	8300-704	Attenuator "A" Board Assembly	Basic Manual
	8300-074	Schematic	Basic Manual
A8	8300-705	Filter Board Assembly	Basic Manual
	8300-075	Schematic	Basic Manual
A9	8300-707	Frequency Board Assembly	Appendix D
	8300-077	Schematic	Appendix D
A10	8300-703	Pre-Amplifier Board Assembly	Basic Manual
	8300-073	Schematic	Basic Manual
A11	8300-713	Power Supply #3 Board Assembly	Basic Manual
	8300-083	Schematic	Basic Manual
A12	8300-712	Power Supply #2 Board Assembly	Basic Manual
	8300-082	Schematic	Basic Manual
A13	8300-711	Power Supply #1 Board Assembly	Basic Manual
	8300-081	Schematic	Basic Manual
A14	8300-714	Attenuator "B" Board Assembly	Basic Manual
	8300-084	Schematic	Basic Manual
A15	8300-710	Print Out	Appendix G
	8300-080	Schematic	Appendix G

OVERRANGE BOARD ADDENDUM

This unit is equipped with an OVERRANGE INDICATOR board. A schematic diagram for this board is contained on drawing number C8300-088.

The purpose of the OVERRANGE board is to provide a visual indication that the linear input range has been exceeded.

On all functions except frequency a reading of 12000 or higher will cause the OVERRANGE INDICATOR to light. On the frequency function, a reading in excess of 19999 will cause the OVERRANGE INDICATOR to light.

REVISIONS						
REV	AUTH	DESCRIPTION	ZONE	EFF ON	DATE	APRD

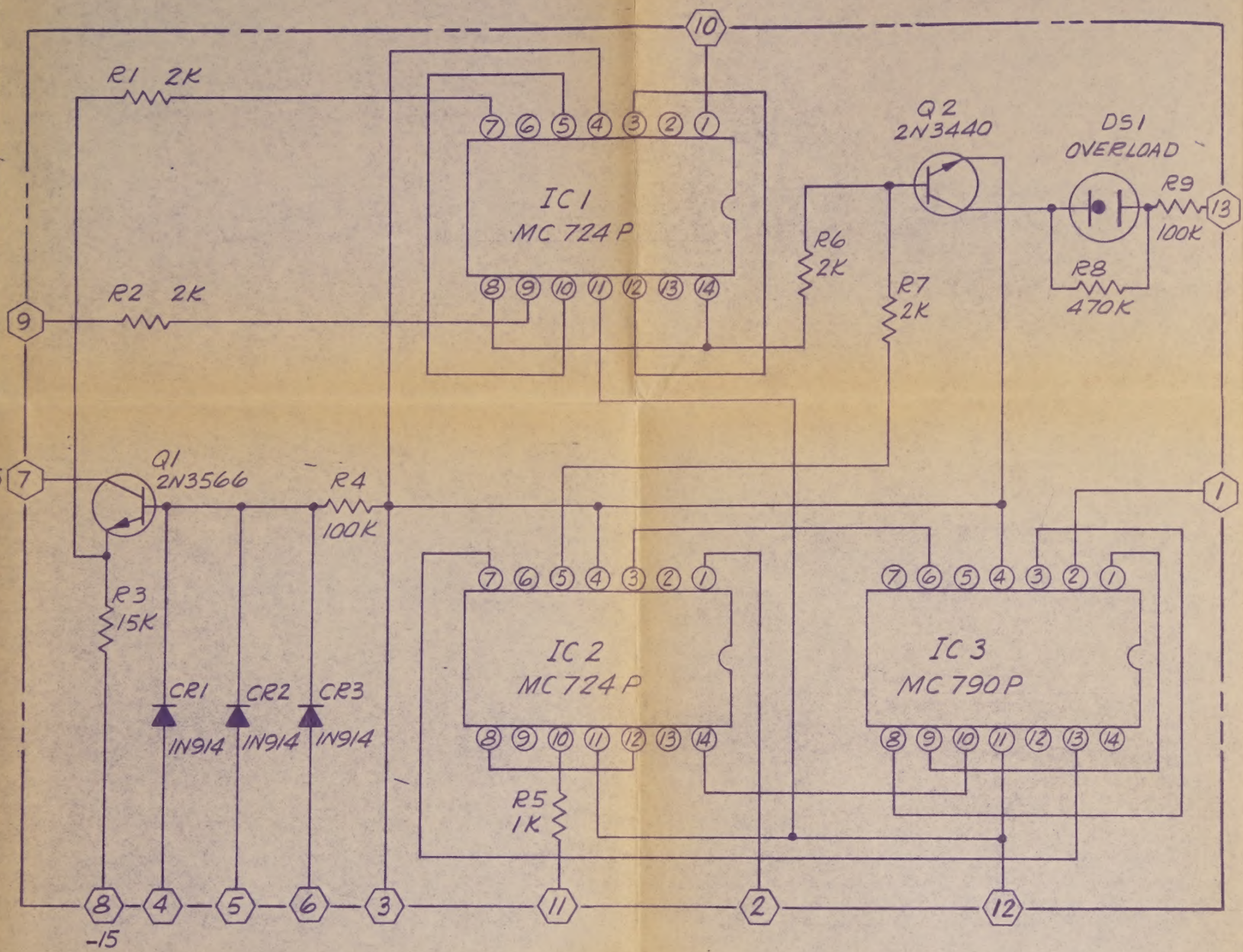

REQD PER ASSY	ITEM NO.	PART NUMBER	PART NAME	MATERIAL — SPECIFICATION	CODE IDENT	FINISH	REF DES.	ZONE

DIM IN INCHES
TOLERANCES
.XXX = .010
.XX = .03
X° = 30'

BREAK ALL SHARP CORNERS & EDGES
MACH SURFACES ✓

DWG C SIZE

TITLE SCHEMATIC - OVERRANGE (A19)

MODEL 8300 & 8303

EXCEPT AS OTHERWISE PROVIDED BY CONTRACT, THESE DRAWINGS AND SPECIFICATIONS ARE THE PROPERTY OF CALICO, AND SHALL NOT BE REPRODUCED OR COPIED OR USED AS THE BASIS FOR THE MANUFACTURE OR SALE OF APPARATUS WITHOUT WRITTEN PERMISSION.

RELEASE	E. Shultz	7/15/69		
CHECKER	[signature]	6/17/9	PURCHASING	
DESIGN			PROJ ENGR	G. THRAP 6/16/69
DRFTSMN	Wiener	6/13/9	CHF ENGR	

DASH NO.	QTY REQD	NEXT ASSEMBLY	EFF ON	AUTH

CALICO
CALIFORNIA INSTRUMENTS CORP.
SAN DIEGO, CALIFORNIA

CONTRACT NO.

CODE IDENT 16067

DWG NO. C8300-088 REV —

SCALE — SHEET 1 OF 1

2. FOR P.C. BOARD ASSY SEE DWG. No. 8300-725

1. ALL RESISTORS ARE 1/4 W 5%

NOTES: (UNLESS OTHERWISE SPECIFIED)

C8300-088

Digitized by the Internet Archive
in 2025

https://archive.org/details/manualsplus_05551

REVISIONS						
REV	AUTH	DESCRIPTION	ZONE	EFF ON	DATE	APRD

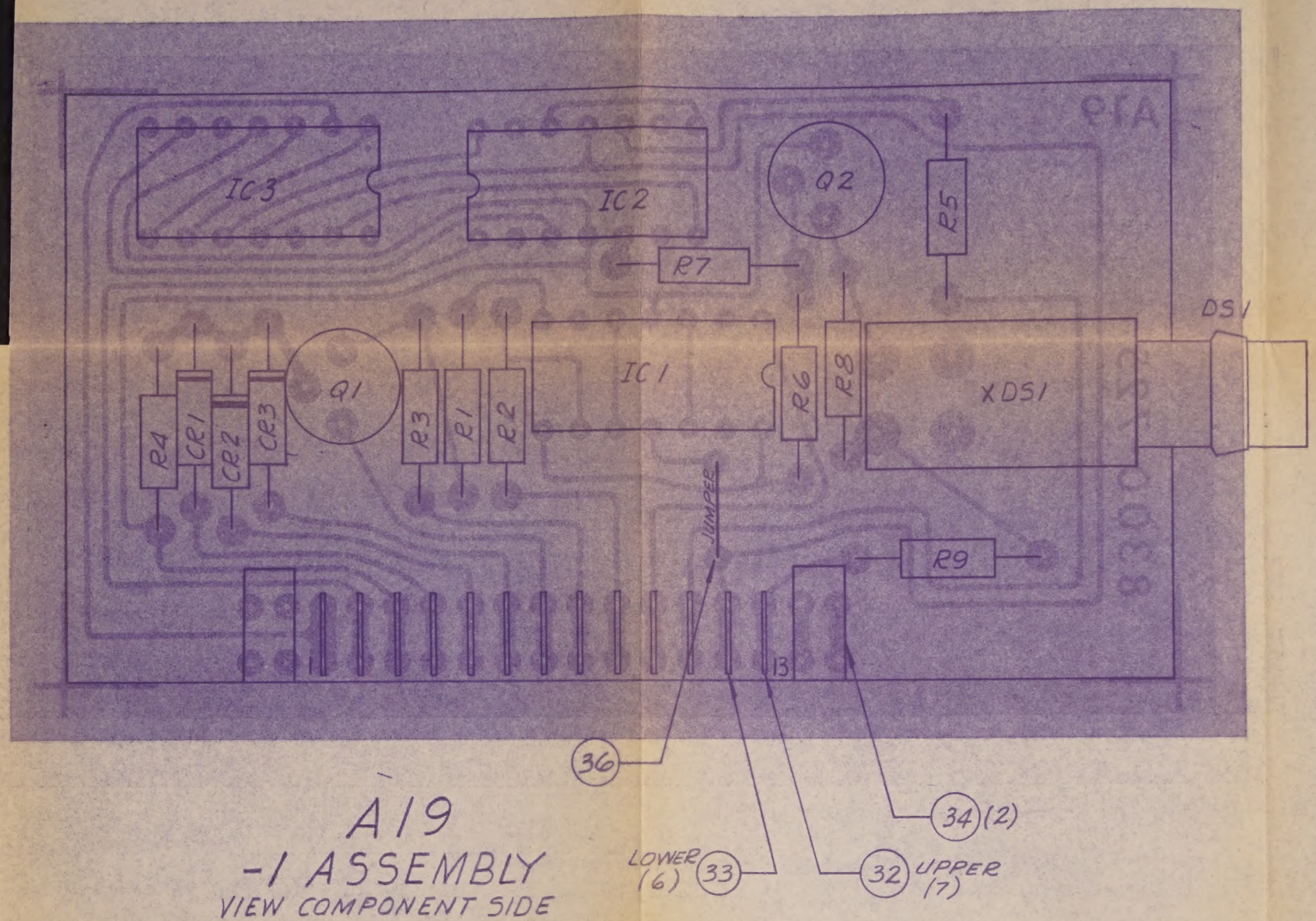

A19
-1 ASSEMBLY
VIEW COMPONENT SIDE

1. FOR SCHEMATIC SEE DWG. NO. C8300-088

NOTES: (UNLESS OTHERWISE SPECIFIED)

REQD PER ASSY	ITEM NO.	PART NUMBER	PART NAME	MATERIAL — SPECIFICATION	CODE IDENT	FINISH	REF DES.	ZONE

DIM IN INCHES
TOLERANCES
.XXX = .010
.XX = .03
X° = 30'

BREAK ALL SHARP CORNERS & EDGES
MACH SURFACES √

DWG SIZE C

EXCEPT AS OTHERWISE PROVIDED BY CONTRACT, THESE DRAWINGS AND SPECIFICATIONS ARE THE PROPERTY OF CALICO, AND SHALL NOT BE REPRODUCED OR COPIED OR USED AS THE BASIS FOR THE MANUFACTURE OR SALE OF APPARATUS WITHOUT WRITTEN PERMISSION.

DASH NO.	QTY REQD	NEXT ASSEMBLY	EFF ON	AUTH

TITLE
OVERRANGE A19
P.C. BOARD ASSEMBLY

MODEL 8300 & 8303

RELEASE	E. Shuett	7/15/67		
CHECKER	[illegible]	6/12/9	PURCHASING	
DESIGN			PROJ ENGR	
DRFTSMN	J. Wener	6/11/9	CHF ENGR	

CALICO
CALIFORNIA INSTRUMENTS CORP.
SAN DIEGO, CALIFORNIA

CONTRACT NO.
CODE IDENT 16067
DWG NO. C8300-725
REV
SCALE 4/1
SHEET 2 OF 4

CALICO F-302

CALICO | CODE IDENT 16067 | PARTS LIST

REF. DES.	MFG. NUMBER	DESCRIPTION	CODE IDENT	CALICO STOCK NUMBER	ITEM NO.
A19	8300-725	OVERRANGE BOARD ASSY	16067		1
	-7	P.C. BOARD	16067	1-55064	2
					3
					4
A19CR1	IN 914	DIODE	JEDEC	3-10118	5
A19CR2	IN 914	DIODE	JEDEC	3-10118	6
A19CR3	IN 914	DIODE	JEDEC	3-10118	7
					8
					9
A19DS1	CG03-RCS-N120	LAMP	03797	2-41119	10
					11
A19IC1	MC 724P	IC	04713	3-30111	12
A19IC2	MC 724P	IC	04713	3-30111	13
A19IC3	MC 790P	IC	04713	3-30113	14
					15
A19Q1	2N3566	TRANSISTOR	07263	3-30091	16
A19Q2	2N3440	TRANSISTOR	95303	3-30090	17
					18
A19R1	RC07GF202J	RESISTOR 2K 1/4W 5%	JEDEC	5-10059	19
A19R2	RC07GF202J	RESISTOR 2K 1/4W 5%	JEDEC	5-10059	20
A19R3	RC07GF153J	RESISTOR 15K 1/4W 5%	JEDEC	5-10080	21
A19R4	RC07GF104J	RESISTOR 100K 1/4W 5%	JEDEC	5-10100	22
A19R5	RC07GF102J	RESISTOR 1K 1/4W 5%	JEDEC	5-10053	23
A19R6	RC07GF202J	RESISTOR 2K 1/4W 5%	JEDEC	5-10059	24
A19R7	RC07GF202J	RESISTOR 2K 1/4W 5%	JEDEC	5-10059	25
A19R8	RC07GF474J	RESISTOR 470K 1/4W 5%	JEDEC	5-10115	26
A19R9	RC07GF104J	RESISTOR 100K 1/4W 5%	JEDEC	5-10100	27
					28
					29
A19XDS1	Q-082-4P	SOCKET--LAMP	03797	2-41120	30
					31
	02-007-372-5-200	ELCO PIN (Upper Tier)	91662	2-40328	
	02-006-332-5-200	ELCO PIN (Lower Tier)	91662	2-40329	31
	62-5204-40-12	ELCO GUIDE SOCKET	91662	2-40115	
	24GA	BUSS WIRE			

MODEL 8300 CALICO P/N 8300-725

TITLE OVERRANGE BOARD ASSEMBLY

TABLE OF CONTENTS

D.C. VOLTMETER

GENERAL DESCRIPTION

A - 1.1 INTRODUCTION 1
1.2 DESCRIPTION 1
1.3 EQUIPMENT SUPPLIED 1
1.4 ACCESSORY EQUIPMENT 1

INSTALLATION AND OPERATION

A - 2.1 UNPACKING 4
2.2 POWER REQUIREMENTS 4
2.3 OPERATING CONTROLS 4
2.4 ACCEPTANCE TEST PROCEDURE 5
2.5 INSTALLATION 6

THEORY OF OPERATION

A - 3.1 GENERAL 9
3.2 DETAILED CIRCUIT DESCRIPTION 9

CALIBRATION AND TEST PROCEDURE

A - 4.1 TEST EQUIPMENT REQUIRED 20
4.2 CALIBRATION PROCEDURE 20
4.3 TEST PROCEDURE 21

MAINTENANCE AND TROUBLE SHOOTING

A - 5.1 GENERAL 25
5.2 TROUBLESHOOTING 25

CIRCUIT DIAGRAMS

A - 6.1 GENERAL 26
6.2 REFERENCE DESIGNATIONS 26

DRAWINGS

REPLACEABLE PARTS

A - 7.1 GENERAL 27
7.2 ORDERING INFORMATION 27

PARTS LISTS

APPENDIX A	CODE TO NAME LIST	
APPENDIX B	A.C. CONVERTER	
	ACCEPTANCE TEST PROCEDURE	B1
	THEORY OF OPERATION	B3
	DETAILED CIRCUIT DESCRIPTION	B4
	CALIBRATION AND TEST PROCEDURE	B5
	DRAWINGS	
	PARTS LISTS	
APPENDIX C	OHMS CONVERTER	
	ACCEPTANCE TEST PROCEDURE	C1
	THEORY OF OPERATION	C2
	DETAILED CIRCUIT DESCRIPTION	C2
	CALIBRATION AND TEST PROCEDURE	C3
	DRAWINGS	
	PARTS LISTS	
APPENDIX D	FREQUENCY CONVERTER	
	ACCEPTANCE TEST PROCEDURE	D1
	THEORY OF OPERATION	D1
	DETAILED CIRCUIT DESCRIPTION	D4
	CALIBRATION AND TEST PROCEDURE	D6
	DRAWINGS	
	PARTS LISTS	
APPENDIX E	CURRENT CONVERTER	
	ACCEPTANCE TEST PROCEDURE	E1
	THEORY OF OPERATION	E1
	DETAILED CIRCUIT DESCRIPTION	E1
	CALIBRATION AND TEST PROCEDURE	E2
	DRAWINGS	
	PARTS LISTS	
APPENDIX F	AC CURRENT MODE	
	ACCEPTANCE TEST PROCEDURE	F1
	THEORY OF OPERATION	F1
	CALIBRATION AND TEST PROCEDURE	F3
APPENDIX G	PRINT-OUT (IF SUPPLIED)	

SPECIFICATIONS

All specifications tested in accordance with standard CALICO test procedures.

	VOLTS DC	VOLTS AC	KILOHMS	MILLIAMPERES DC	MILLIAMPERES AC	KILOHERTZ	EXTERNAL REFERENCE
RANGE	.1, 1, 10, 100, 1000		.1, 1, 10, 100, 1000	.1, 1, 10, 100, 1000		.1, 1, 10, 100, 1000	+8 to +12 volts DC
ACCURACY (after 15 min. warm up at 25°C)	±0.01% of reading ±1 digit	±0.45% of reading ±5 digits	±0.02% of reading ±2 digits	±0.03% of reading ±2 digits	±0.7% of reading ±5 digits	±0.01% of reading ±1 digit	±0.04% of reading ±1 digit
RESOLUTION	0.01% of full scale	0.01% of full scale at 1 KH_z	0.01% of full scale	0.01% of full scale	0.01% of full scale at 1 KH_z	0.01% of full scale	0.01% of full scale
OVERRANGE	20%	20%	20%	20%	20%	100%, but not to exceed 1 MH_z	---------
INPUT IMPEDANCE	10 megohm or greater *	less than .5% loading from 1KΩ source at 10 KH_z	---------	1K, 100, 10, 1, .1Ω as of function of range.		less than .5% loading from a 1KΩ source at 10KH_z	1 megohm nominal
SOURCE CURRENT	1 nanoampere max. at 25°C	----------	.1, 1 and 10KΩ--1MA 100KΩ--.1MA 1000KΩ--.01MA	-----	-----	----------	---------
NOMINAL FULL SCALE SETTLING TIME	500 MS	5 SEC	500MS to 100K 1 sec to 1000K	500MS	5 SEC	twice the selected gate time	---------
AC NORMAL MODE REJECTION	60db at 60 H_z	----------	60db at 60 H_z	60db at 60 H_z	-----	----------	----------
COMMON MODE REJECTION	120db from DC to 1KH_z with 1KΩ unbalance	100db at 60H_z with 100Ω unbalanced	----------	-----	-----	----------	----------
STABILITY (% of full scale at 25°C for 30 days)	±0.01%	±0.1%	±0.03%	±0.03%	±0.1%	±0.01%	±0.02%
TEMPERATURE STABILITY (% of full scale per °C)	±0.002%	±0.015%	±0.005%	±0.005%	±0.015%	±0.001%	±0.02%
LINE VOLTAGE STABILITY (% of full scale per volt of line change)	±0.001%	±0.002%	±0.002%	±0.001%	±0.002%	±0.001%	±0.001%
FREQUENCY RANGE	-----	30 H_z to 10 KH_z	----------	-----	30 H_z to 10 KH_z	50 H_z to 1 MH_z .1 volt rms to 100KH_z .25volt rms to 1MH_z Minimum Input Signal	----------
INPUT OVERLOAD	200V DC or peak AC (.1, 1 and 10 ranges) 1500V DC or peak AC (100 and 1000 ranges)		200 volts DC or peak AC	Fused for protection above 200% of full scale Minimum		250 volts rms max.	±50volts DC

DISPLAY TIME	200MS Nominal
TEMPERATURE RANGE	0 to 50°C
MAXIMUM COMMON MODE VOLTAGE	500 volts DC or peak AC
POWER	15 watt maximum, 115 volts AC ±10 volts AC or 230 volts AC ±20 volts AC, 50 to 400 H_z
SIZE	3 1/2 X 8 3/4 X 14 1/2
WEIGHT	11 pounds net, 15 pounds shipping

* An input impedance of typically 1000 megohms may be obtained on the .1, 1 and 10 volts DC ranges by switching the rear panel attenuator "in out" switch to the out position.

GENERAL DESCRIPTION

1.1 INTRODUCTION

This instruction manual contains information on the installation, operation, calibration and maintenance of the CALICO 8300 Digital Multimeter.

1.2 DESCRIPTION

The CALICO Model 8300 is a Precision Digital Multimeter. It measures DC volts, AC volts, DC current, AC current, ohms and frequency.

The ranges and functions are selected by push buttons located on the front panel.

The CALICO Model 8300 Digital Multimeter uses integrated circuits extensively throughout the instrument. The unit operates from 115 volts or 230 volts AC, from 50 to 400 H_z, and consumes less than 15 watts.

1.3 EQUIPMENT SUPPLIED

The unit is shipped with an 8300-403 Accessory Kit consisting of:

1-Beldon #17258 Power Cord
1-CALICO #8300-800-1 Input Cable
1-Littlefuse .1A. S.B. Fuse
1-WALSCO 2525 Alignment Tool
1-CALICO 8300 Instruction Manual

1.4 ACCESSORY EQUIPMENT

Option R	Rack Mount Adapter
Option K	4 Wire Kelvin Klip Input Cable
Option P	BCD Print Card
Option B	Bench Mount Adapter

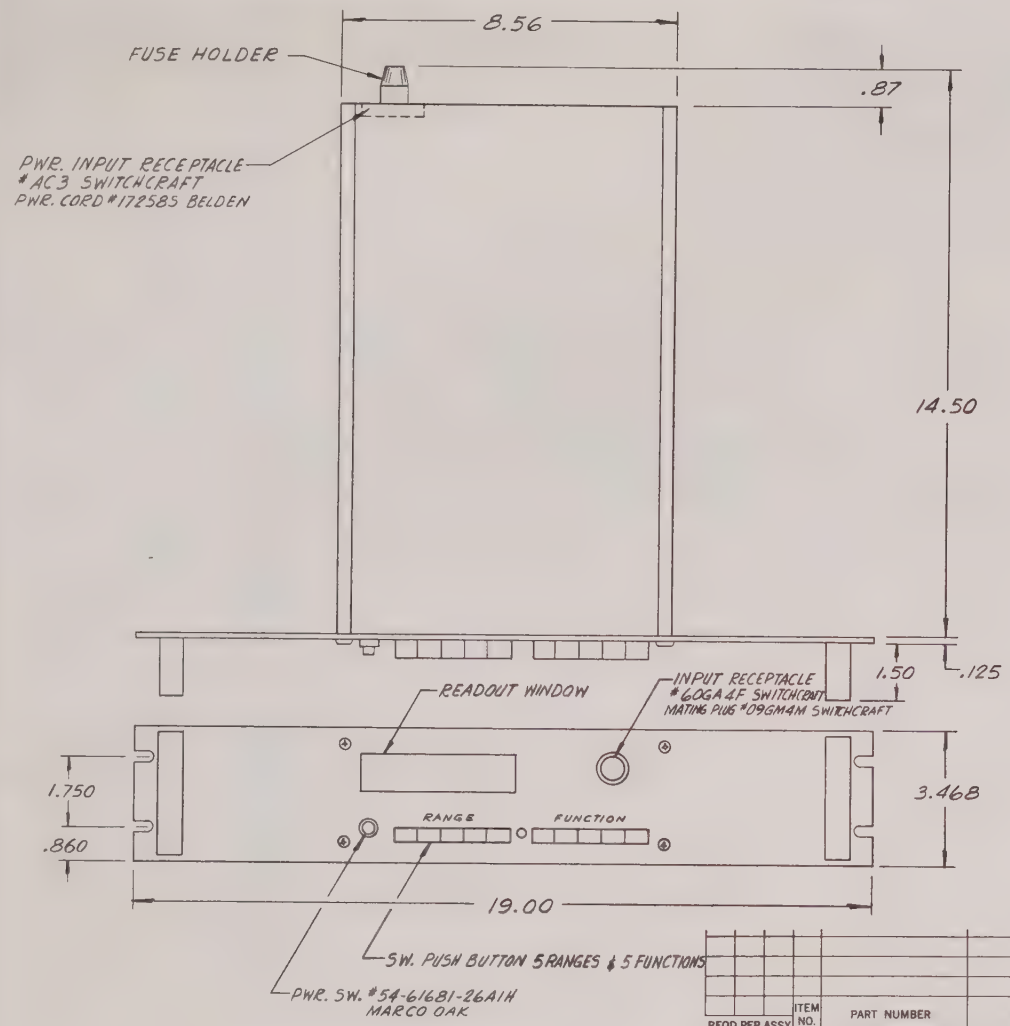

8300 R SHOWN

8303 R SAME AS ABOVE EXCEPT IT HAS 3 RANGES & 3 FUNCTIONS

NOTES (UNLESS OTHERWISE SPECIFIED)

REVISIONS						
REV	AUTH	DESCRIPTION	ZONE	EFF ON	DATE	APRD

REQD PER ASSY	ITEM NO.	PART NUMBER	PART NAME	MATERIAL — SPECIFICATION	CODE IDENT	FINISH	REF DES.	ZONE

DIM IN INCHES TOLERANCES .XXX = .010 .XX = .03 X° = 30'

BREAK ALL SHARP CORNERS & EDGES MACH SURFACES ✓

DWG SIZE C

EXCEPT AS OTHERWISE PROVIDED BY CONTRACT, THESE DRAWINGS AND SPECIFICATIONS ARE THE PROPERTY OF CALICO, AND SHALL NOT BE REPRODUCED OR COPIED OR USED AS THE BASIS FOR THE MANUFACTURE OR SALE OF APPARATUS WITHOUT WRITTEN PERMISSION.

DASH NO.	QTY. REQD	NEXT ASSEMBLY	EFF ON	AUTH

TITLE OUTLINE DRAWING MULTIMETER-RACK MOUNT

MODEL 8300 R & 8303 R

RELEASE	E. Smith	7/5/9	PURCHASING	
CHECKER	[illegible]	5/1/9	PROJ ENGR	
DESIGN			CHF ENGR	
DRFTSMN	[illegible]	5/1/69		

CALICO
CALIFORNIA INSTRUMENTS CORP.
SAN DIEGO, CALIFORNIA

CONTRACT NO. | CODE IDENT 16067

DWG NO. C8300-900 | REV \

SCALE 1/2 | SHEET 1 OF 1

CALICO F-102

C8300-900 \

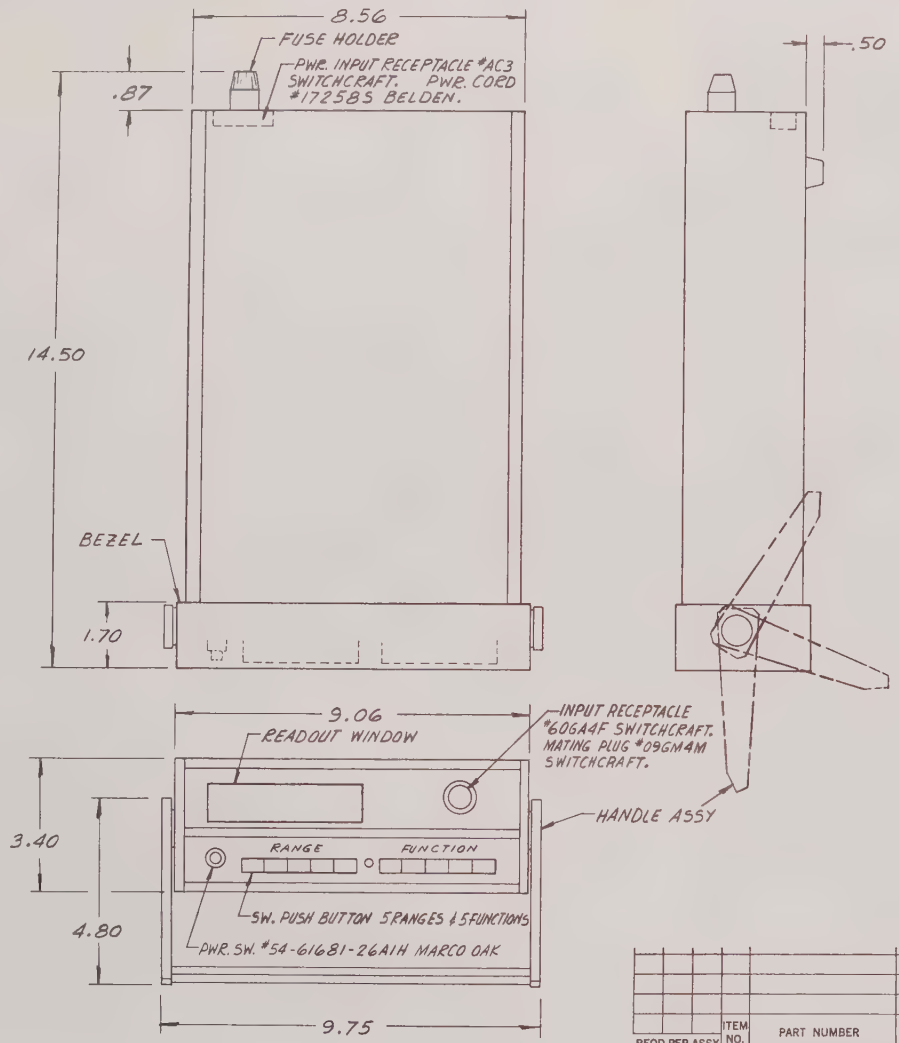

8300 SHOWN

8303 SAME AS ABOVE EXCEPT IT HAS 3 RANGES & 3 FUNCTIONS

NOTES: (UNLESS OTHERWISE SPECIFIED)

REVISIONS						
REV	AUTH	DESCRIPTION	ZONE	EFF ON	DATE	APRD

REQD PER ASSY	ITEM NO.	PART NUMBER	PART NAME	MATERIAL — SPECIFICATION	CODE IDENT	FINISH	REF DES.	ZONE

DIM IN INCHES TOLERANCES .XXX = .010 .XX = .03 X° = 30'

BREAK ALL SHARP CORNERS & EDGES MACH SURFACES

DWG SIZE C

EXCEPT AS OTHERWISE PROVIDED BY CONTRACT, THESE DRAWINGS AND SPECIFICATIONS ARE THE PROPERTY OF CALICO AND SHALL NOT BE REPRODUCED OR COPIED OR USED AS THE BASIS FOR THE MANUFACTURE OR SALE OF APPARATUS WITHOUT WRITTEN PERMISSION.

TITLE OUTLINE DRAWING MULTIMETER

MODEL 8300 & 8303

RELEASE

CHECKER 5/2/9

DESIGN

DRFTSMN 5/2/9

PURCHASING

PROJ ENGR

CHF ENGR

CALICO

CALIFORNIA INSTRUMENTS CORP. SAN DIEGO, CALIFORNIA

CONTRACT NO.

CODE IDENT 16067

DWG NO. C8300-901

REV

SCALE 1/2

SHEET 1 OF 1

DASH NO.	QTY REQD	NEXT ASSEMBLY	EFF ON	AUTH

CALICO F-102

C8300-901

INSTALLATION AND OPERATION

2.1 UNPACKING

This multimeter is shipped in a cardboard container with a protective inner packing. Do not destroy the packing container until the unit has been inspected for possible damage in shipment.

2.2 POWER REQUIREMENTS

The unit operates from 115 VAC ±10 VAC or 230 VAC ±20 VAC at 50 to 400 H_z. The power consumption is less than 15 watts.

2.3 OPERATING CONTROLS

2.3.1 FRONT PANEL CONTROLS

2.3.1.1 RANGE SWITCH

The range switch is a five station, interlock, push button switch located on the left side of the front panel. The five ranges are .1, 1, 10, 100 and 1000. These ranges are direct multipliers for the units of measure used on the function switch, i.e., .1 KΩ full scale, .1 MA full scale, etc.

2.3.1.2 FUNCTION SWITCH

The function switch is a five station, interlock, push button switch located on the right side of the front panel. Six functions are available from the five front panel push buttons. These functions are kilohertz, DC volts, AC volts, DC milliamperes, AC milliamperes and kilohms. Each function has a labeled push button with the exception of AC milliamperes. To achieve this function the MA button and the AC button must be pressed simultaneously. Each of the six functions have five ranges with the exception of KH_z, it uses only the upper four ranges.

2.3.1.3 FRONT PANEL ZERO CONTROL

The front panel zero control is used to zero the preamplifier. It, therefore, has the most effect when the preamplifier is used at its highest gain setting. The highest preamplifier gain setting is used on .1-DC, .1-KΩ and all DC current ranges.

2.3.1.4 POWER SWITCH

The front panel power switch is a lighted push button type switch. It is a push for on -- push for off type action.

2.3.2 REAR PANEL CONTROLS

2.3.2.1 115-230 SWITCH

The rear panel 115-230 switch allows the 8300 to be operated from 115 volts AC or 230 volts AC. To operate from 115 volts AC slide the switch to the 115V position and install a .2 amp slow blow fuse. To operate from 230 volts AC slide the switch to 230V and install a .1 amp slow blow fuse.

2.3.2.2 ATTENUATOR IN-OUT SWITCH

The rear panel attenuator IN-OUT switch allows the 10 megohm attenuator to be switched out on the 10V DC, 1V DC and .1V DC ranges. This typically provides 1000 megohms input impedance.

NOTE

The 8300 will not yield a reading on the 100 volt and 1000 volt ranges with the attenuator switch in the "out" position.

2.3.2.3 REFERENCE INT-EXT SWITCH

This switch allows the 8300 to be driven from an external DC reference voltage for ratio measurements.

NOTE

The front panel input low forms the ground return for the external reference voltage.

2.4 ACCEPTANCE TEST PROCEDURE

Inspect the unit for any possible shipping damage immediately upon receipt. If any damage is evident, notify the carrier. Do not return the instrument to the factory without prior approval. If the unit appears to be in good condition, perform the following:

a) Connect a wattmeter between the AC power input to the digital multimeter and the AC line. Check that the 115-230 switch is in the desired position and the proper fuse is installed. Turn the unit on and check that the power does not exceed 15 watts. Allow 15 minutes for the digital multimeter to warm up.

b) Short all three input leads together. Select the DC function and the 10 range. Check that the display reads 00.000 ± 1 digit.

c) Using a Kintel 331A precision DC standard, or equivalent, connect the 8300 input to the DC standard output. Adjust the DC standard to 10.000 volts DC ±.003%. The 8300 should read 10.000 ±2 digits.

d) If further evaluation is required see section 4.2. Calibration Procedure.

2.5 INSTALLATION

The CALICO Model 8300 Digital Multimeter may be bench mounted or rack mounted. To rack mount specify option R rack mount adapter. To bench mount specify Option B bench mount adapter.

Although no special cooling fans are required, the unit should be installed so that the flow of air is not obstructed. Care should also be taken not to install the unit in areas where excessive heat is produced by other equipment.

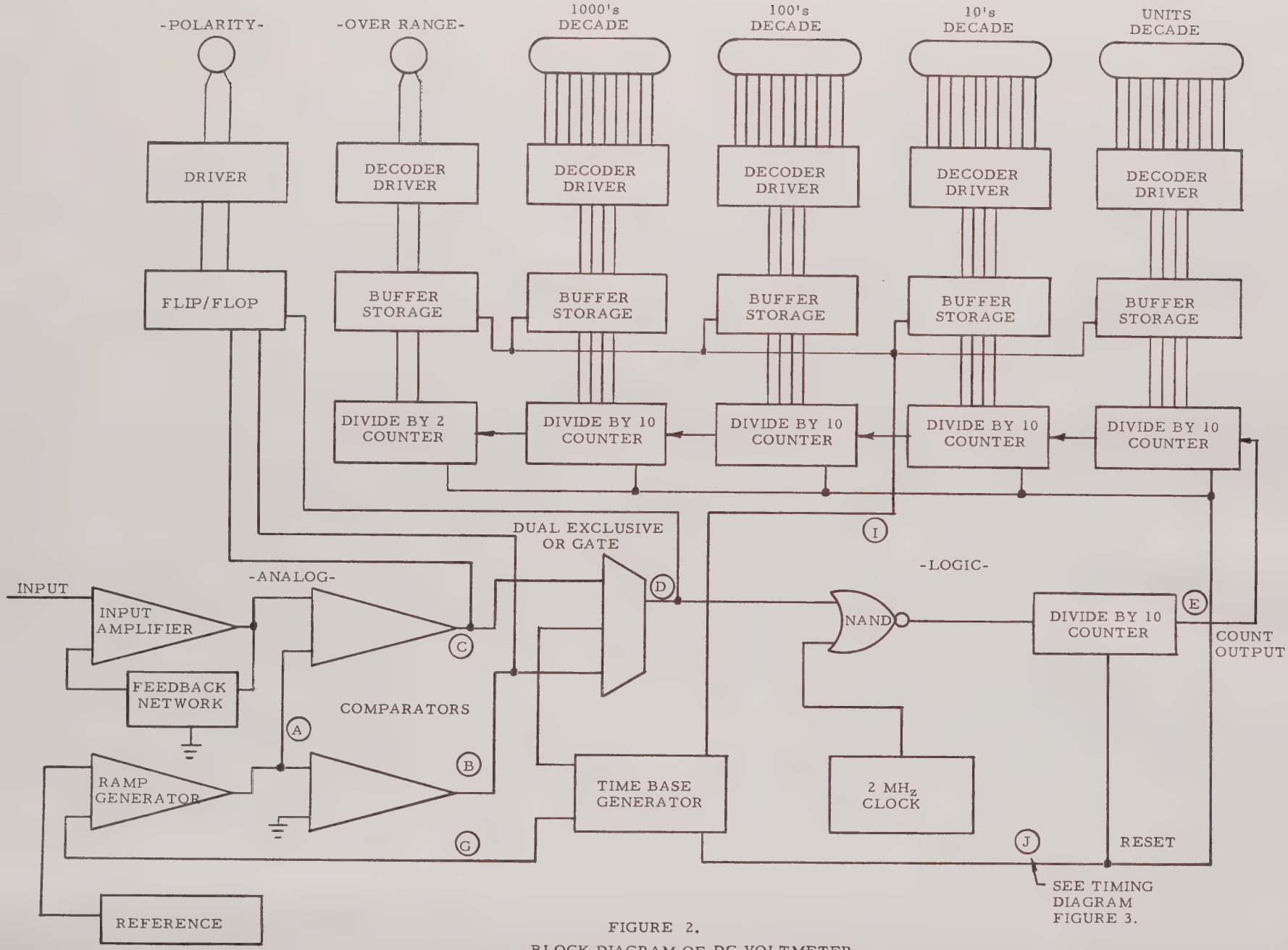

FIGURE 2.
BLOCK DIAGRAM OF DC VOLTMETER

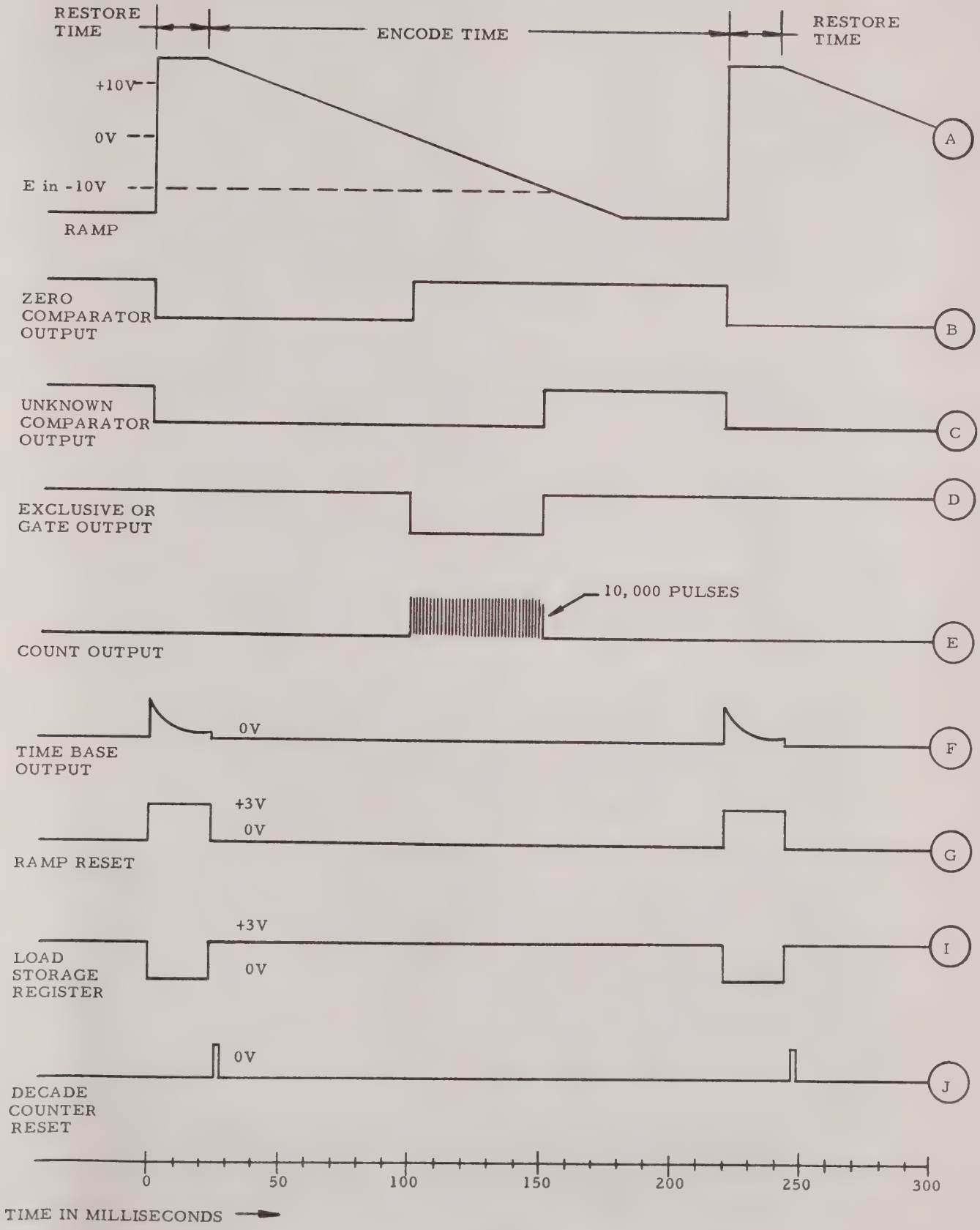

FIGURE 3.

INTERNAL WAVEFORMS
(REF TO FIGURE 2)

THEORY OF OPERATION

3.1 GENERAL

The CALICO 8300 Series Digital Multimeter is a single ramp type digital voltmeter. A block diagram, which illustrates the theory of operation, is shown in Figure 2. The input signal is applied to a solid state chopper stabilized preamplifier with gains of +1.0, +10.0 and +100.0. This provides a full scale input to the analog to digital converter of ±10 volts on all input ranges.

The voltage ramp is reset to approximately +15 volts at the start of each conversion sequence as shown in Figure 3. The negative slope of this precision ramp is determined by stable passive components and the semi-infinite gain of an operational integrator.

This precision voltage ramp drives the inverting inputs of two differential comparators. The non-inverting input to one comparator is driven by the unknown input signal through the input amplifier. The non-inverting input of the remaining comparator is grounded. Figure 3 illustrates the timing sequence for a -10 volt input signal.

The output of these comparators drive a dual exclusive or gate which generates a pulse-width modulated signal. The width of this pulse-width modulated signal is proportional to the amplitude of the input signal.

This pulse-width modulated signal is used to gate a crystal controlled clock. The resulting pulse train is fed into a digital counter to produce a numerical representation equivalent to the analog input. This number is transferred into a digital storage register upon receipt of a load register pulse. The output of this register drives a set of decoder drivers which in turn drive a set of nixie tubes.

The polarity of the input signal is determined by the outputs of the two comparators. If the signal comparator is activated first, then the polarity of the input signal is positive. If the zero comparator is activated first, then the polarity of the input signal is negative.

The time base generator is used to determine the timing sequence throughout the digital multimeter.

3.2 DETAILED CIRCUIT DESCRIPTION

3.2.1 TIME BASE GENERATOR

The time base generator consists of a uni-junction transistor oscillator and associate wave shaping circuits located on the A2 assembly. A schematic diagram for this circuitry is shown on drawing E8300-071 and consists of transistor A2Q3, integrated circuit A2 IC4 and associated components.

The unijunction oscillator generates a non-symetrical output which is used to divide the machine timing into two intervals, a restore time period and an encode time period. The charging time of the unijunction oscillator, which determines the encode time period of the machine, is set by A2R18 and A2C5 and is approximately 200 milliseconds. The discharge time of the unijunction oscillator, which determines the restore time period of the machine is set by A2R22 and A2C5 and is approximately 15 milliseconds.

The output of the unijunction oscillator is applied to A2IC4 and Pin 12 where it is converted to a rectangular pulse by two successive invertors. The positive going, or leading edge, of this pulse is used to reset the ramp to approximately +15 volts. This signal is available at A2IC4 Pin 1 and is illustrated in Figure 3, wave form G. The load storage register signal is generated at A2IC4 Pin 2 and is illustrated in Figure 3, waveform I.

The decade counter reset pulse is generated at A2IC22 Pin 3 and is illustrated in Figure 3, waveform J. This pulse is approximately 0.1 microsecond behind the positive going edge of the load register pulse. The decade counter reset pulse is approximately 1 millisecond wide and is used to reset the decade counters back to zero.

3.2.2 INPUT AMPLIFIER

The input amplifier is a chopper stabilized potentiometric amplifier. A schematic diagram for this amplifier is located on drawing D8300-073. This amplifier is the A10 assembly.

This amplifier is divided into five sections; the modulator, the carrier amplifier, the demodulator, the output integrator and the oscillator driver.

The oscillator, A10IC2 and associated components, operates at a normal frequency of 525 H_z. This oscillator is a Wein Bridge type oscillator. The amplitude control is provided by means of two zener diodes A10CR9 and A10CR10. The output A10IC2 Pin 6 drives two drivers; the modulator driver A10Q3 and the demodulator driver A10Q5. The modulator driver produces a trapezoidal waveform swinging between 0 volts and +5.5 volts. The demodulator driver produces a square wave that swings between 0 volts and +8 volts.

The modulator A10Q2 is a MOSFET connected as a common source switch. The DC gate bias is derived from the same feedback point that the case and source are driven from. The gate drive signal is applied through A10C4. Any voltage difference between the feedback and the input will appear as a 525 H_z square wave at the drain lead of A10Q2.

This modulated signal is then fed into the carrier amplifier through A10C2. The carrier amplifier A10Q1 and A10IC1 is an AC coupled, non-innerting amplifier with a gain of approximately 1000 at 525 H_z.

The output of the carrier amplifier A10TP2 is applied to the demodulator through A10R15. The demodulator A10Q6 recieves its base drive through A10CR5, A10CR6, A10CR7 and A10CR8 from the demodulator driver A10Q5.

The output of the demodulator drives the output integrator A10IC3 through A10R19. The output of the output integrator A10 Pin 10 is returned to one of three feedback loops A10 Pin 3, A10 Pin 4 or A10 Pin 5 by way of the push button switches on the master board A1. If the output A10 Pin 10 is connected to feedback point A10 Pin 3, 100 per cent of the output is returned as feedback giving a gain of +1.00. If the output A10 Pin 10 is connected to feedback point A10 Pin 4, 10 per cent of the output is returned as feedback giving a gain of +10.0. If the output A10 Pin 10 is connected to feedback point A10 Pin 5, 1 per cent of the output is returned as feedback giving a gain of +100.0.

The zeroing of the amplifier is accomplished by feeding a DC voltage into A10 Pin 1 from a front panel zero adjustment.

3.2.3 INPUT FILTER

The input filter A8 is a 5 pole active, notch/RC type. A schematic diagram is contained on drawing C8300-075.

The notch filter is formed by A8R2, A8R3, A8R5, A8R6, A8C1, A8C2 and A8C3. The RC section is formed by A8R1 A8R4 and A10C1. The input is applied at A8 Pin 4. Low frequency signals, DC to 50 H_z, are fed directly through to the output A8 Pin 5. Signals present at the output are applied to the input of the direct coupled amplifier A8Q1 gate. These signals are fed through amplifier at a gain of .995 and reinjected into the notch through A8R6. As the input signal reaches 60 H_z the phase shift in the notch is 180° thus causing the feedback to be out of phase with the input. This gives high rejection to frequencies around 60 H_z. Because the same DC voltage is present on both sides of the capacitors, no net change is produced thus eliminating the source impedance dependency of conventional notch filters. As the frequency is increased A8C1 and A8C3 become a low impedance by-pass for A8R2 and A8R3 thus leaving A8R1, A8R4 and A10C1 to form a simple RC section. This section starts to roll off around 30 H_z but does not become effective until it reaches 100 H_z. Overvoltage protection is provided by two low leakage diodes, A8CR1 and A8CR2, reverse biased to the power supplies.

3.2.4 INPUT ATTENUATOR

The input attenuator, A7 assembly, is a resistive divider used to accurately reduce the 100 and 1000 volt inputs to a 10 volt input as required by the input amplifier. A schematic for the attenuator is contained on drawing C8300-074.

The resistors in the attenuator are purchased as a matched set. These resistors are matched for valve and temperature tracking to produce an accurate attenuation independent of temperature changes.

NOTE

The operation and calibration of the capacitive divider are covered under the AC to DC Converter section.

3.2.5 RAMP GENERATOR

The ramp generator is located on the A2 assembly and a schematic diagram is shown in drawing E8300-071. The ramp generator consists of A2Q2, A2IC1 and associated components.

The ramp generator is an operational integrator which converts a precision input current into a linear voltage ramp. Transistor A2Q2 is a dual transistor used in the differential emitter follower configuration to provide a high input impedance at the summing point of the operational integrator. The output of this differential emitter follower is used to drive a high gain integrated circuit amplifier A2IC1. The output of A2IC1 is returned to the inverting input of A2Q2 through a precision integrating capacitor.

The precision input current to the ramp generator is determined by a zener diode reference and a series resistance to the summing point. The zener diode reference consists of A2Q1, A2CR1 and associated components. Transistor A2Q1 is used as a constant source of current which drives the zener reference A2CR1. The temperature coefficient of this zener reference is matched to the temperature coefficient of the precision integrating capacitor A2C1. This is accomplished by adjusting the value of resistor A2R6.

3.2.6 COMPARATORS

The comparators are located on the A2 assembly and a schematic diagram is shown in drawing E8300-071. The comparators A2IC3 and A2IC2 are high gain differential amplifiers. The inverting input to each comparator is driven from the ramp output through A2R15 and A2R16. The non-inverting input to A2IC3 is grounded through A2R3 and A2R19. The non-inverting input to A2IC3 is driven by the unknown input through A2R17 and A2R14 from the output of the input amplifier. Diodes A2CR6, A2CR7, A2CR8 and A2CR9 form input protection networks for the comparators.

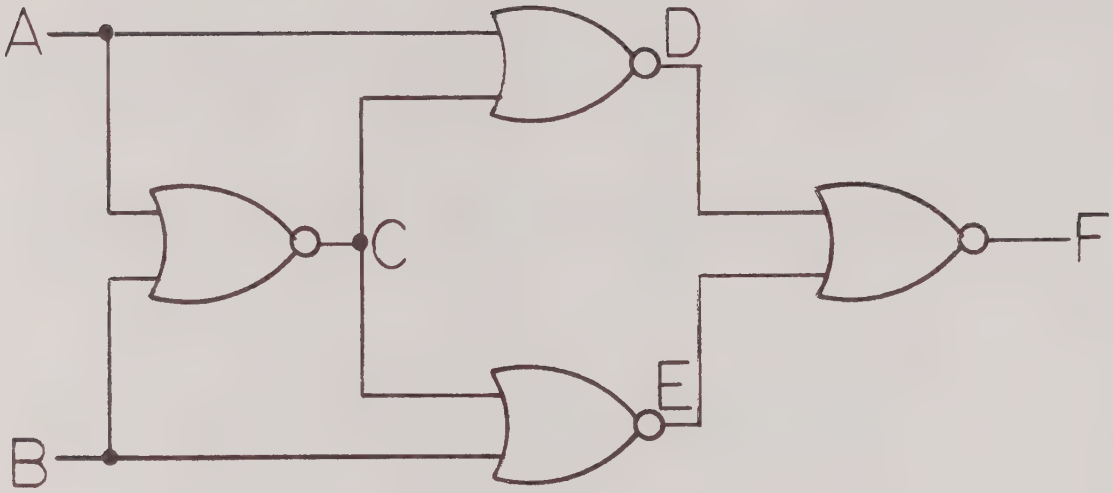

TRUTH TABLE

POSITIVE "1" STATE

A	B	C	D	E	F
0	0	1	0	0	1
1	0	0	0	1	0
0	1	0	1	0	0
1	1	0	0	0	1

THE OUTPUT AT "F" IS TRUE ONLY WHEN A DIFFERENCE EXISTS BETWEEN POINTS "A" AND "B".

FIGURE 4.

TRUTH TABLE

As the ramp output becomes more negative than the non-inverting input of either comparator this comparator output drives positive. The difference in time when one comparator output is driven positive and when the other comparator is driven positive is directly proportional to the analog input voltage.

Each comparator output drives an invertor located on the A2 assembly. These invertors A2IC5 are used to inhibit the comparator outputs during the ramp restore time interval.

3.2.7 DUAL EXCLUSIVE OR GATE

The dual exclusive or gate is located on the A2 assembly and a schematic diagram is shown in drawing E8300-071. This gate is driven from the invertors contained in integrated circuit A2IC5.

The dual exclusive or gate A2IC7 is comprised of four dual input nor gates. The purpose of this gate is to give an output only when a difference exists between comparator outputs. The block diagram and truth table per Figure 4 illustrate how this is accomplished.

3.2.8 2 MH_z CRYSTAL OSCILLATOR

The 2 MH_z crystal oscillator is located on the A2 assembly and a schematic diagram is shown in drawing E8300-071.

The function of the crystal oscillator is to provide a precision frequency which is used to accurately measure the pulse width of the dual exclusive or gate output.

The 2 MH_z crystal oscillator consists of A2IC6, crystal A2Y1 and associated components. Resistors A2R27 and A2R28 provide a DC bias current to the two stage integrated circuit oscillator. The crystal is placed in the positive feedback loop of the oscillator.

The output of the 2 MH_z oscillator is gated with the output of the dual exclusive or gate and provides a 2 MH_z pulse train at Pin 5 of A2IC4.

This 2 MH_z pulse train drives a divide by ten integrated circuit counter A2IC11. The resulting 200 KH_z pulse train output, at PIN 8 of A2IC11, is used to drive the decade counters.

3.2.9 DECADE COUNTER

Each decade contains an integrated circuit counter, storage register, decoder-driver and nixie display tube. A schematic diagram for the decade counter is shown in drawing E8300-071.

The 200 KH_Z pulse train is applied to the decade counter A2IC10 in the "units" decade. The count output of the "units" decade is used to drive the count input of the "tens" decade. In like manner, the output of the "tens" decade is used to drive the "hundreds" decade, etc. The total count is accumulated in all the decade counters before the end of the encode time as shown in Figure 3 waveform E.

At the start of the restore time, when the load storage register pulse goes to zero volts, the BCD number in each of the decade counters is transferred into the storage register A2IC9, A2IC13, etc.

The BCD outputs of each of the storage registers activate the corresponding decoder-drivers A2IC8, A2IC12, etc. The ten-line output of the decoder-drivers activates the nixie tubes DS-1, DS-2, etc.

At the conclusion of the restore time period, all decade counters are reset to zero and are ready to receive new data.

3.2.10 OVERRANGE

The overrange circuitry is located on the A2 assembly and a schematic diagram is shown in drawing E8300-071.

The overrange circuitry has two modes of operation. These are:

1) In the first mode, no count pulses are received from the last decade counter stage, and as a result, a zero occurs in the overrange indicator.

2) In the second mode, a single count pulse is received from the last decade counter, and as a result, a "1" indication occurs in the overrange indicator.

The operation of the overrange circuit can be explained as follows:

The count output of the last decade is applied to the input of an invertor A2IC22 Pin 14. This invertor outputA2IC22 Pin 5 is applied to the clocked input of a JK flip-flop, A3IC21 Pin 6. During the preceeding "restore" portion of the time base, the

reset input A2IC21 Pin 10 was driven positive thus forcing the output A2IC21 Pin 9 on to its low state. Since the steering inputs A2IC21 Pin 5 and 7 are unbiased, the next negative pulse at the clocked input A2IC21 Pin 6 will advance the output A2IC21 Pin 9 to the high state.

Both outputs of this flip-flop A2IC21 Pins 8 and 9 are used to drive the steering inputs to the next flip-flop A2IC21 Pins 1 and 3. At the conclusion of the "encode" portion of the time base, a load storage register pulse occurs. This pulse is applied to the clocked input A2IC21 Pin 2. Therefore, the second flip-flop stores the data gathered in the first flip-flop. The outputs of the second flip-flop A2IC21 Pins 13 and 14 are applied to the inputs of the two nixie drivers AsQ4 and A2Q5, which in turn drive the 0 and 1 indication of the ten thousands display A2DS5.

3.2.11 POLARITY

The polarity circuit is located on the A2 assembly and a schematic diagram is shown in drawing E8300-071.

The polarity of the input signal is determined by the differential comparators. Since the ramp has a negative slope, a positive input signal will activate the unknown comparator first. Likewise, a negative input signal will activate the zero comparator first.

The output of the dual exclusive or gate is applied to the inputs of two dual nor gates, A2IC5 Pins 6 and 2. This allows the outputs of the dual nor gates A2IC5 Pins 3 and 5 to respond to comparator inputs only during the time the dual exclusive or gate is in the low state. During this time the comparator that remains negative will cause a positive output at A2IC5 Pin 3 or 5. These in turn drive a direct coupled flip-flop whose outputs are A2IC6 Pins 14 and 3. The output that occurs at Pin 14 drives the negative polarity indicator A2Q6. The output that occurs at Pin 3 drives the positive polarity indicator A2Q7.

3.2.12 POWER SUPPLY

The power supply is divided into four sections; the A11 assembly, the A12 assembly, the A13 assembly and the power transformer.

The A11 assembly provides ±15 volts DC. A schematic diagram is contained on drawing D8300-083. The unregulated ±24 volts enters the A11 board at Pins 5 and 1. This unregulated voltage originates on the A13 board at Pins 9 and 14. Because the two regulating sections on the A11 board are the same, the explanation will cover only the +15 volt regulator. The incoming +24 volt unregulated supply drives an integrated circuit amplifier A11IC1 Pin 7, a constant current source A11Q1, A11R1 and A11CR2, and an output driver A11Q3. The constant current

source A11Q1 provides 4 MA to drive the two reference zener diodes A11CR7 and A11CR8. This provides +12 volts at Pin 3 of A11IC1. The regulated output at A11 Pin 4 is fed back to the inverting input of A11ICC1 at Pin 2 through A11R11.

The resistive divider formed by A11R11 and A11R12 provides +12 volts at A11IC1 Pin 2 when the output is at +15. As the output load is increased, the output voltage becomes less positive causing A11IC1 Pin 2 to become more negative than Pin 3. This in turn causes the output of A11IC1 Pin 6 to drive more positive. As A11IC1 Pin 6 drives more positive, this increases the base drive to the output driver A11Q3 forcing its emitter more positive and restoring the output voltage. When the output load exceeds 180 MA the excess base drive is pulled off the output driver through A11CR11 and A11CR13 limiting the maximum output current. This forms the short circuit protection for the regulator.

NOTE

If a short circuit is applied for more than 30 seconds, permanent damage may occur.

The A12 board provides +3.6 volts regulated output and +6.2 volts unregulated. A schematic diagram is contained on drawing C8300-082.

The A12 assembly contains a full wave silicon diode bridge rectifier A12CR1 through A12CR4, capacitive filter A12C1 and A12C2, and a high gain feedback type regulator. The power transformer A1T1 secondary 4 connects to the A12 board at Pins 1 and 3. From this the full wave silicon diode bridge and the capacitive filter provide +6.2 volts at A12 Pin 8. The integrated circuit amplifier A12IC1 operates off of +15 volts, A12 Pin 5 and -15 volts A12 Pin 4. The output A12 Pin 7 is fed back to the input of the amplifier A12IC1 Pin 2 through a resistive divider to the -15 volt supply. This produces 0 volts at the input when the output is +3.6 volts. If the output A12 Pin 7 becomes less positive, the input A12IC1 Pin 2 goes negative with respect to Pin 3. This drives the amplifier output A12IC1 Pin 6 more positive. In turn the emitter of the predriver A12Q1 drives more positive forcing the emitter of the output driver A12Q2 more positive, restoring the output voltage.

The A13 board contains 3 full wave silicon diode bridges and 4 output filters. A schematic diagram is contained on drawing C8300-081.

Transformer secondary A1TI-S1 connects to A13 Pins 6 and 7 and through a full wave silicon diode bridge A13CR1 through A13CR4 into a capacitive output filter A13C1 it produces +200 volts. A bleeder resistor A13R1 is in parallel with A13C1 to discharge the capacitor.

Transformer secondary A1TI-S2 is a center tapped winding that drives A13 Pins 10 and 11. The center tap ties to ground at A13 Pin 13. The full wave silicon diode bridge A13CR5 through A13CR8 provides ±24 volts into two filter capacitors A13C2 and A13C3.

Transformer secondary A1TI-S3 is connected to A13 Pins 3 and 4. The full wave silicon diode bridge A13CR9 through A13CR12 provides -22 volts into a capacitive output filter A13C4.

POWER SUPPLY

VOLTAGE	TOLERANCE	P-P RIPPLE	RIPPLE FREQ	VOLTAGE AVAILABLE AT:	AVERAGE LOAD CURRENT
+15	±10%	8MV	$5H_z$ (1)	A11 Pin 4	62MA
-15	±10%	2MV	$5H_z$ (1)	A11 Pin 2	46MA
+24	±20%	1V	$120H_z$ (2)	A11 Pin 5	78MA
-24	±20%	.7V	$120H_z$ (2)	A11 Pin 1	52MA
+6.2	±20%	.4V	$120H_z$ (2)	A12 Pin 8	750MA
+3.6	±10%	2MV	$5H_z$ (1)	A12 Pin 7	700 MA
+200	±20%	1V	$120H_z$ (2)	A13 Pin 8	12MA
-22	±20%	2V	$120H_z$ (2)	A13 Pin 5	10MA

Pin Number

Board Assembly Number

All voltages and ripples are measured with 115 volts AC 60 H_z applied to the transformer primary.

(1) RIPPLE generatedby 5 H_z conversion rate.

(2) Twice the line frequency.

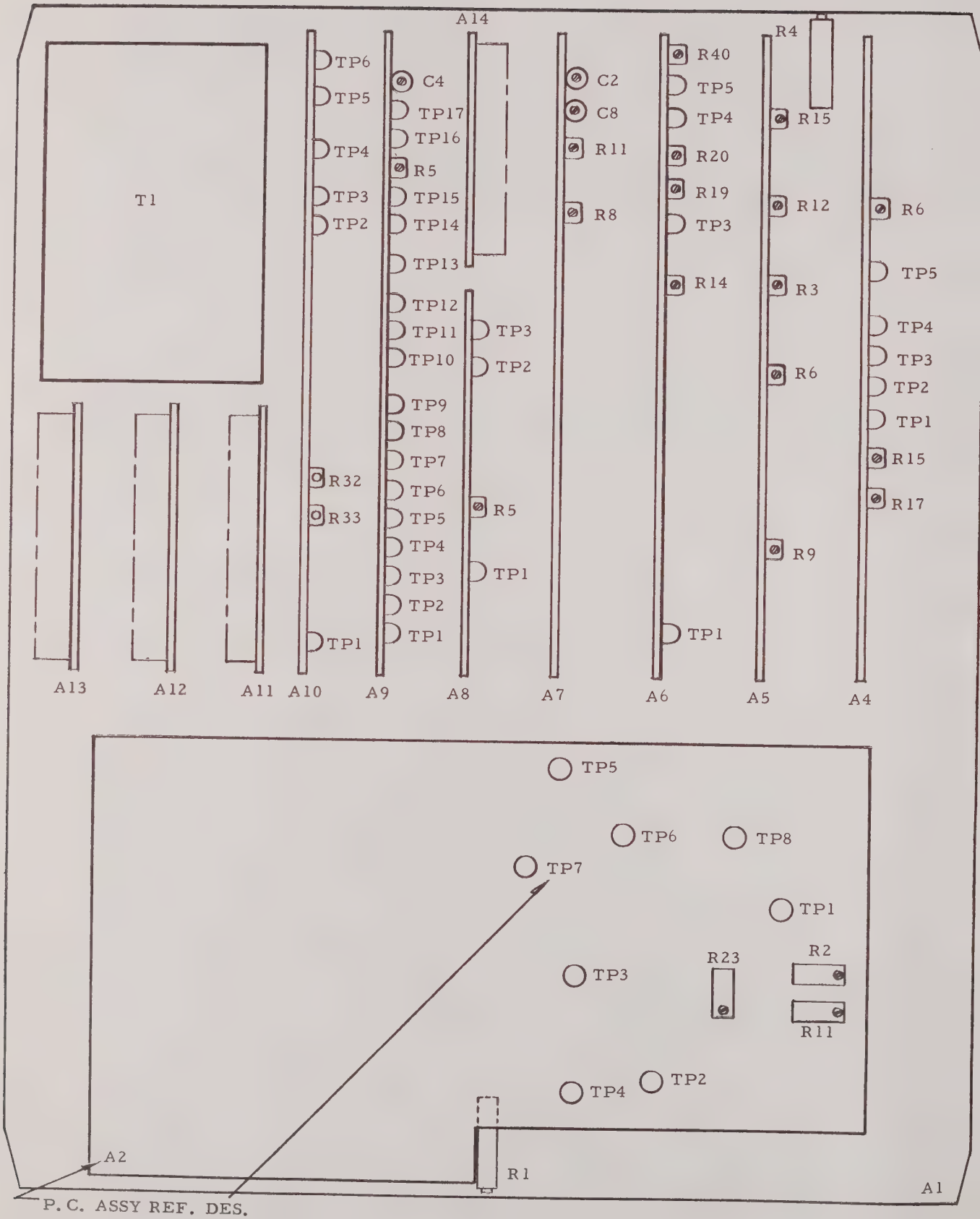

FIGURE 5. (TOP VIEW) ADJUSTMENTS AND TEST POINTS

CALIBRATION AND TEST PROCEDURE

4.1 TEST EQUIPMENT REQUIRED

a) Oscilloscope: Tektronix 533 with L preamp or equivalent
b) DC Voltage Standard: Kintel 331 or equivalent
c) Oscillator: Hp 200 CD or equivalent
d) Divider: G.R. DV 4107 or equivalent
e) AC Wattmeter: Triplett 661 or equivalent
f) Variac: Superior Elective: 216 or equivalent
g) Precision Resistor: 1.0 megohm ±.1%

4.2 CALIBRATION PROCEDURE

The following calibration procedure may be performed on a routine basis to insure that the unit remains within the specified tolerances. This procedure should always be performed after any repairs are made on the basic accuracy determining circuitry. Before calibrating the unit, apply AC power and allow a minimum of one hour to permit the internal circuitry to stabilize.

This procedure covers the following adjustments:

a) Zero adjustment of A-D Converter
b) Zero adjustment of input amplifier
c) Calibration of A-D Converter
d) Calibration of input amplifier
e) Calibration of input attenuator
f) Input filter adjustment
g) External reference adjustment

The calibration procedure should be performed as follows:

4.2.1 Select the DC function and the 10 range. Short the input leads together. Adjust A2R23 to give ±00.000 in the display.

4.2.2 Select the .1 range and short the input leads together. Adjust the front panel zero control A1R1 to give ±.00000 in the display.

4.2.3 Select the 10 range and apply +10.000 volts DC ±.003% at the input. Adjust A2R2 until the display reads +10.000. Apply -10.000 volts DC ±.003% at the input. Adjust A2R11 until the display reads -10.000.

4.2.4 Position the attenuator IN-OUT switch to the out position. Connect the output of the DC voltage standard 4.1-b to the input of the resistive divider 4.1-d. Connect the input of the 8300 to the output of the resistive divider. Adjust the DC voltage standard to 10.000 volts DC ±.003%.

4.2.4.1 Adjust the resistive divider to .1000000. Select the 1 range on the 8300 and adjust A10R32 until the display reads 1.0000.

4.2.4.2 Adjust the resistive divider to .0100000. Select the .1 range on the 8300 and adjust A10R31 until the display reads .10000.

4.2.5 Position the attenuator IN-OUT switch to the in position. Select the 100 range on the 8300. Connect the 8300 input to the output of the DC voltage standard. Adjust the output of the DC voltage standard to 100.00 volts DC ±.003%. Adjust A7R8 until the 8300 reads 100.00.

4.2.5.1 Select the 1000 range on the 8300. Adjust the output of the DC voltage standard to 1000.00 volts DC ±.003%. Adjust A7R11 until the 8300 reads 1000.0.

4.2.6 Connect the input of the 8300 to the output of a sine wave oscillator, 4.1-c. Connect the oscilloscope 4.1-a to A8TP1. Select the 10 range and the DC function. Turn the oscillator output to zero and check for less than ±1 volt DC at A8TP1. If more than ±1 volt DC exists at A8TP1, reselect A8R7 until the output at A8TP1 is less than one volt DC. Adjust the oscillator output to 10 volts peak. Sweep the oscillator around 60 Hz and adjust A8R5 for the deepest null.

4.2.7 Select the 10 range and the DC function. Apply an input voltage of +10 volt to the 8300 input. Apply the same voltage to the external reference input located on the rear panel. Slide the external reference switch to the external position. Adjust the external reference calibration A1R2 until the display reads +10.000.

4.3 TEST PROCEDURE

The following test procedure, or any part of it, may be performed as required. This procedure should only be performed after completing 4.2 CALIBRATION PROCEDURE. This test procedure covers the following specifications for the digital multimeter:

1. Common Mode Rejection
2. Input Impedance
3. Temperature Coefficient
4. Stability
5. Resolution
6. Input Overload
7. Line Voltage Range
8. Filter Rejection
9. Reading Rate

4.3.1 COMMON MODE REJECTION

Select the .1 range and the DC function. Connect the black and white input leads of the 8300 to one end of a 1 KΩ 1/2W 5% resistor. Connect the red lead to the other end of the 1 KΩ resistor. Connect the Hi output of the oscillator to the black and white leads.

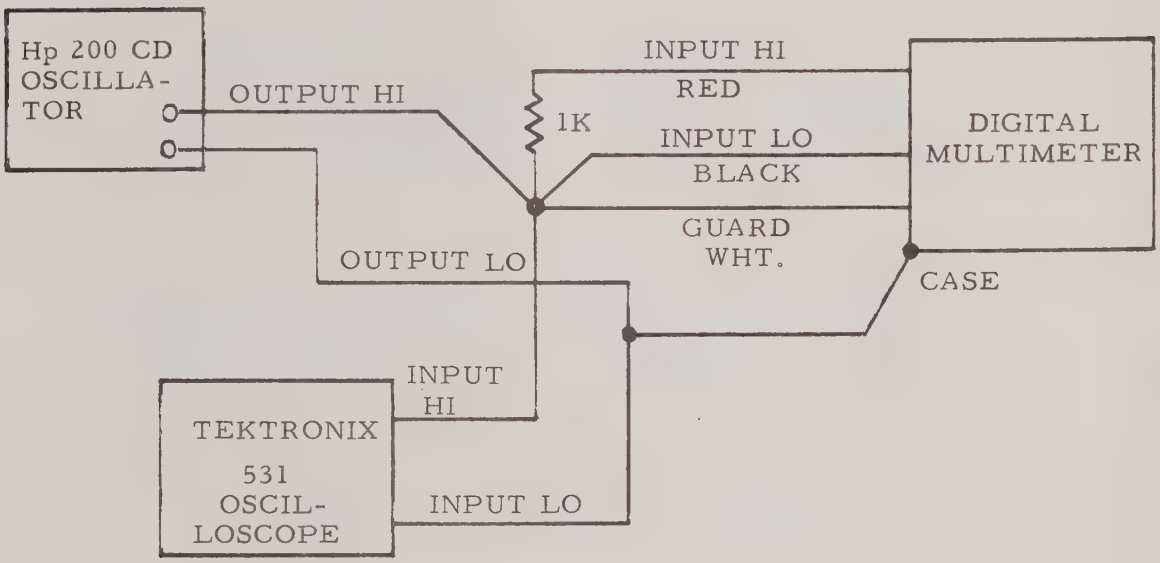

Connect the low output of the oscillator to the 8300 case and connect the oscilloscope across the oscillator output. Adjust the oscillator output to zero. Using the front panel zero control, adjust the 8300 to ±.00000. Adjust the oscillator to obtain 20 volts peak-to-peak output at 60 H_z. The 8300 must display ±1 digit or less. This may be repeated for frequencies from DC to 1 KH_z if desired.

4.3.2 INPUT IMPEDANCE

Select the 10 range and the DC function. Connect a .1% 1.0 megohm resistor in series with the input high lead of the 8300. Connect the 8300 input low lead to the output low lead of a precision DC voltage source. Connect the 1.0 megohm resistor to the high output of the DC voltage source. Set the voltage source to 10.000 volts DC.

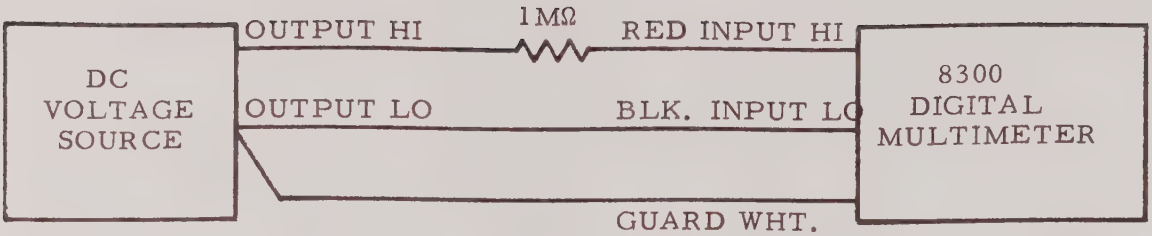

With the attenuator IN-OUT switch in the in position, the display must read 9.080 or higher. With the attenuator IN-OUT switch in the out position, the display will typically read 9.990.

4.3.3 TEMPERATURE COEFFICIENT

Allow the machine to warm-up for one hour at room temperature, 25°C, and check the full scale calibration as given in the calibration adjustment procedure. Place the unit in an environmental chamber and raise the temperature to 50°C. Allow the unit at least one hour to stabilize at 50°C and then check the calibration. The allowable full scale excursion for the Model 8300 is ±5 digits at full scale after zeroing at 50°C if required.

4.3.4 TIME STABILITY

Allow the 8300 to stabilize at 25°C for two hours. Connect the input to a precision full scale DC voltage source. Monitor the 8300 display for a 24 hour period at 25°C. The allowable excursion is ±1 digit.

4.3.5 RESOLUTION

Select the 10 range and the DC function. Connect the 8300 to a precision DC voltage source. Apply an input of one volt. Vary this input by precisely 1 MV. The display should read this one digit change.

4.3.6 INPUT OVERLOAD

Select the 10 range and the DC function. Apply a full scale input voltage and record the reading. Apply an input of 115 VAC 60 Hz. Return the input to the original full scale voltage. The unit should return to the original reading ±1 digit within 30 seconds.

4.3.7 LINE VOLTAGE RANGE

The following line voltage test are made around 115 volts AC 60 H_z. If the unit is used on 230 volts AC or other than 60 H_z the test should be run at that voltage or frequency.

Connect the variac to the 115 volts AC 60 H_z line. Connect the wattmete/voltmeter to the output of the variac and connect the 8300 to the wattmeter/voltmeter output. Apply a full scale input signal to the 8300. Vary the line voltage from 105 to 125 volts AC and check that the total variation is two digits or less.

4.3.8 FILTER REJECTION

Select the 10 range and the DC function. Connect the 8300 input to the oscillator output. Adjust the oscillator to 2 volts peak-to-peak output at 60 H_z. The 8300 should read all zeros ±1 digit.

4.3.9 READING RATE

Connect the oscilloscope to TP7 of the A2 board. Check that the pulses occur at 180 to 250 millisecond intervals.

MAINTENANCE AND TROUBLE SHOOTING

5.1 GENERAL MAINTENANCE

The CALICO 8300 Multimeter is a solid state instrument designed to give years of trouble free service. Since the instrument has no moving parts, maintenance is limited to periodic cleaning in accordance with good commercial shop practices.

5.2 TROUBLESHOOTING

Experience has shown that often the difficulties encountered with equipment are poor input signals or misinterpretation of specifications. Check to be sure that the input is not noisy or erratic, and that you fully understand the characteristics of this instrument as defined in the specifications. Also check that the rear panel switches are in the desired position.

Only skilled personnel who have studied the theory of operation section of this manual should attempt to repair the instrument.

First check the power supplies per the table at the end of the power supply section, 3.2.12.

If the problem is not in the power supply section of the machine, check that the wave forms shown in Figure 3 are correct.

1. The ramp output is available at A2IC1 Pin 6.
2. The comparator outputs are available at A2IC2 Pin 6 and A2IC3 Pin 6.
3. The exclusive or gate output is available at A2IC7 Pin 5.
4. The count pulse train is available at A2IC4 Pin 5.
5. The time base output is available at A2TP7.
6. The load storage register signal is available at A2IC22 Pin 5.
7. The decade counter reset signal is available at A2IC22 Pin 3.

CIRCUIT DIAGRAMS

6.1 GENERAL

This section contains schematics and mechanical diagrams necessary for operation and maintenance of the 8300 series Digital Multimeter. The schematic diagrams illustrate the circuit while the mechanical assemblies indicate the part placement.

(Applicable illustrations to the appendix sections are contained therein, not in this section.)

6.2 REFERENCE DESIGNATIONS

Partial reference designators are shown on schematics and mechanical drawings. Prefix these reference designators with assembly and/or sub-assembly designation for the complete reference designator. For example:

ASSEMBLY/SUB-ASSEMBLY	COMPONENT	COMPLETE DESIGNATION
A1	R1	A1R1
A7	C10	A7C10
A10	IC2	A10IC2

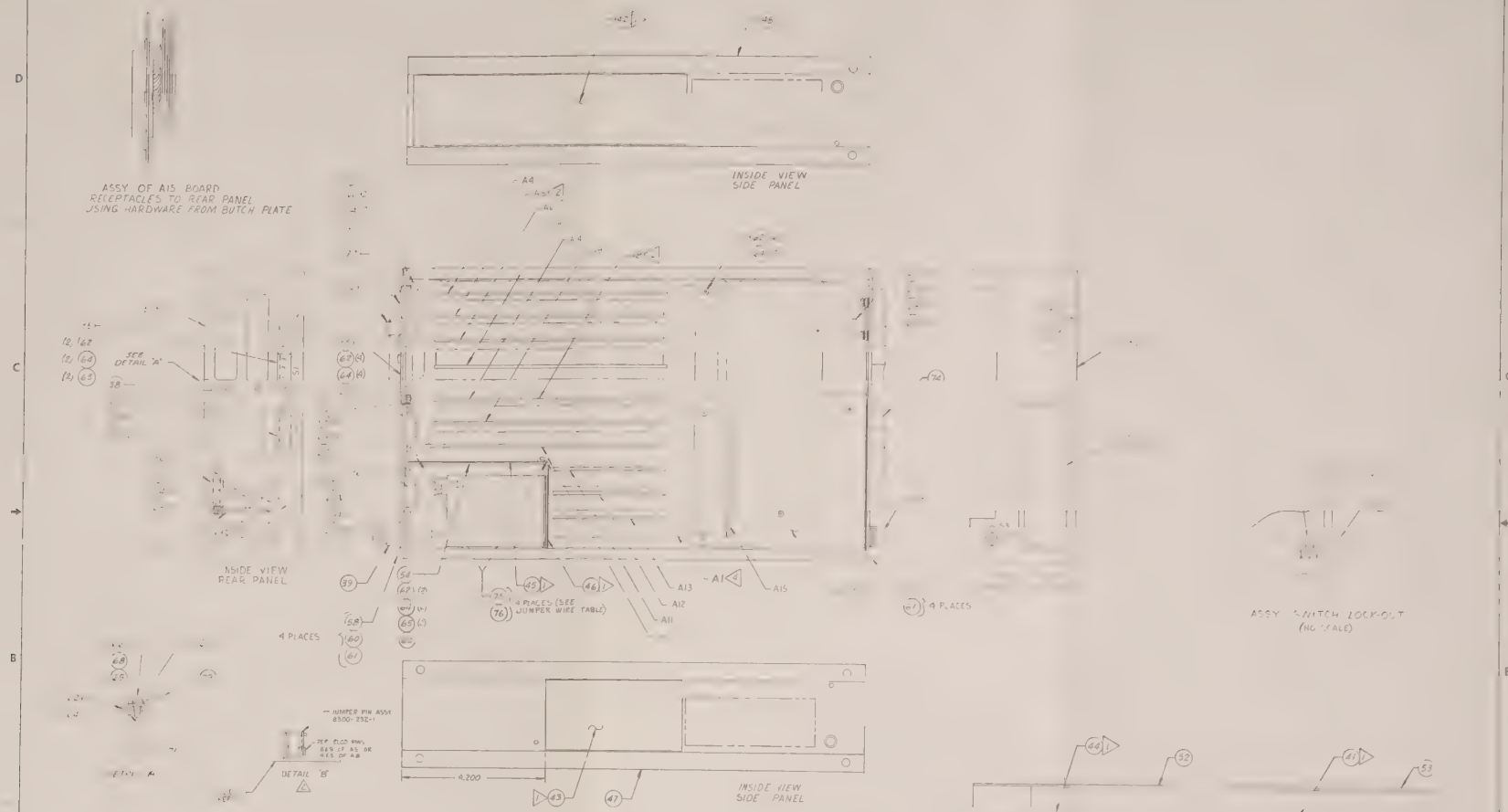

JUMPER WIRE TABLE

8300-719	8300-720	SLEEVED BUSS
8300-720	8300-717	SLEEVED BUSS
8300-719	A1-21	SLEEVED BUSS
8300-716	A1-23	SLEEVED BUSS

WIRE TAB TABLE

WIRE #	FROM	TO	COLOR
1	T1-PR1	S2-3	WHT
2	T1-PR1	S2-5	BLK
3	T1-PR2	S2-2	WHT
4	T1-PR2	S2-4	BLK
5		A1-16	
6		A1-17	
7		A1-15	
8		A1-18	
9			
10			
11	S3-4	S2-2	WHT
12	S3-5	S3-1	YES. SLEEVED BUSS
13	S1-1	A1-19	
14	J5-1	A1-13	SLEEVED BUSS
15	J5-2	A1-10	SLEEVED BUSS
16	J5-3	A1-12	SLEEVED BUSS
17	J5-4	A1-11	SLEEVED BUSS
18	J5-5	A1-14	SLEEVED BUSS
		A1-20	SLEEVED BUSS
		8300-77	PIGTAIL
23	S2-1	S2-6	SLEEVED BUSS
24			
25			
26			

NOTES: (UNLESS OTHERWISE SPECIFIED)

1. SOLDER TABS ON JUMPER PRINT 2 TO A2 BOARD.
2. [illegible] WIRES BETWEEN [illegible]
3. [illegible] JUMPER PIN 8300-232 WHICH [illegible] A5 OR A8
   a) FOR A5 BOARD; JUMPER PINS 8 & 9 ON A1 BOARD.
   b) FOR A8 BOARD; JUMPER PINS 4 & 5 ON A1 BOARD.

▷ APPLY USING DOUBLE-BACK TAPE

REVISIONS						
REV	AUTH	DESCRIPTION	ZONE	EFF ON	DATE	APRD

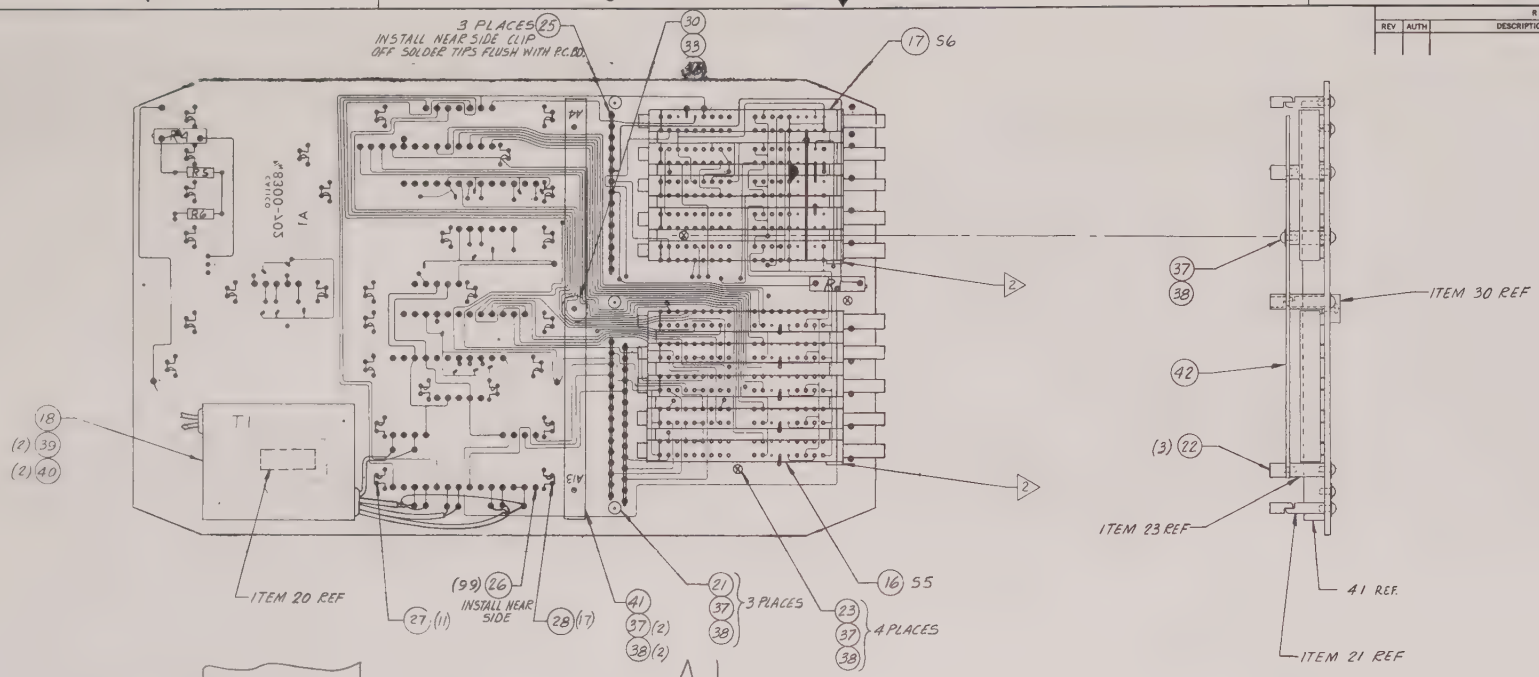

A1
-1 ASSEMBLY
VIEW COMPONENT SIDE
(SHIELD ITEM 42 NOT SHOWN IN THIS VIEW)

WIRE TAB TABLE

WIRE NO.	FROM	TO	WIRE-COLOR
1	T1-SEC.1	A1-3	WHT
2	T1-SEC.1	A1-4	BLK
3	T1-SEC.2	A1-5	RED
4	T1-SEC.2	A1-6	BLK
5	T1-SEC.2	A1-7	WHT
6	T1-SEC.3	A1-1	BLK
7	T1-SEC.3	A1-2	WHT
8	T1-SEC.3 INNER SHLD.	A1-7	#22 SLEEVED BUSS
9	T1-SEC.3 OUTER SHLD.	3" PIG TAIL	#22 SLEEVED BUSS
10	T1-SEC.4	A1-8	BLK
11	T1-SEC.4	A1-9	WHT
12			
13	A1-10	OTHER END NOT CONNECTED	#22 SLEEVED BUSS 11" LG
14	A1-11	"	" 6" LG
15	A1-12	"	" 6" LG

WIRE NO.	FROM	TO	WIRE-COLOR
16	A1-13	OTHER END NOT CONNECTED	#22 SLEEVED BUSS 4" LG.
17	A1-14	"	" 4" LG.
18	A1-15	"	" 6" LG
19	A1-16	"	" 9" LG.
20	A1-17	"	" 4" LG.
21	A1-18	"	" 4" LG.
22	A1-19	"	" 4" LG
23	A1-20	"	" 4" LG
24	A1-21	"	" 2" LG
25	A1-22	"	" 4" LG.
26	A1-23	"	" 2" LG.

▷ MOUNT PUSH BUTTON SWITCHES 1/16 OFF BOARD, WITH LATCHING SPRING FACING UP.
1. FOR SCHEMATIC SEE DWG. NO. 8300-070.

NOTES (UNLESS OTHERWISE SPECIFIED)

REQD PER ASSY	ITEM NO	PART NUMBER	PART NAME	MATERIAL — SPECIFICATION	CODE IDENT	FINISH	REF DES	ZONE
	-1	PL8300-702	PARTS LIST	SHEET 4				

DIM IN INCHES TOLERANCES .XXX ± .010 .XX ± .03 .X ± .30

BREAK ALL SHARP CORNERS & EDGES MACH'D SURFACES √

DWG SIZE D

TITLE MOTHER BOARD (A1)
PC BOARD ASSEMBLY

CALICO
CALIFORNIA INSTRUMENTS CORP
SAN DIEGO, CALIFORNIA

EXCEPT AS OTHERWISE PROVIDED BY CONTRACT, THESE DRAWINGS AND SPECIFICATIONS ARE THE PROPERTY OF CALICO AND SHALL NOT BE REPRODUCED OR COPIED OR USED AS THE BASIS FOR THE MANUFACTURE OR SALE OF APPARATUS WITHOUT WRITTEN PERMISSION.

MODEL 8300
RELEASE E Smith 7/1/9
CHECKER 7/18/9
DESIGN
DRFTSMAN T BROWN 1/24/9
PURCHASING
PROJ ENGR
CHF ENGR

CONTRACT NO
CODE IDENT 16067
DWG NO. D8300-702 REV A
SCALE 1/1 SHEET 2 OF 6

DASH NO.	QTY REQD	NEXT ASSEMBLY	EFF ON	AUTH

D8300-702 A

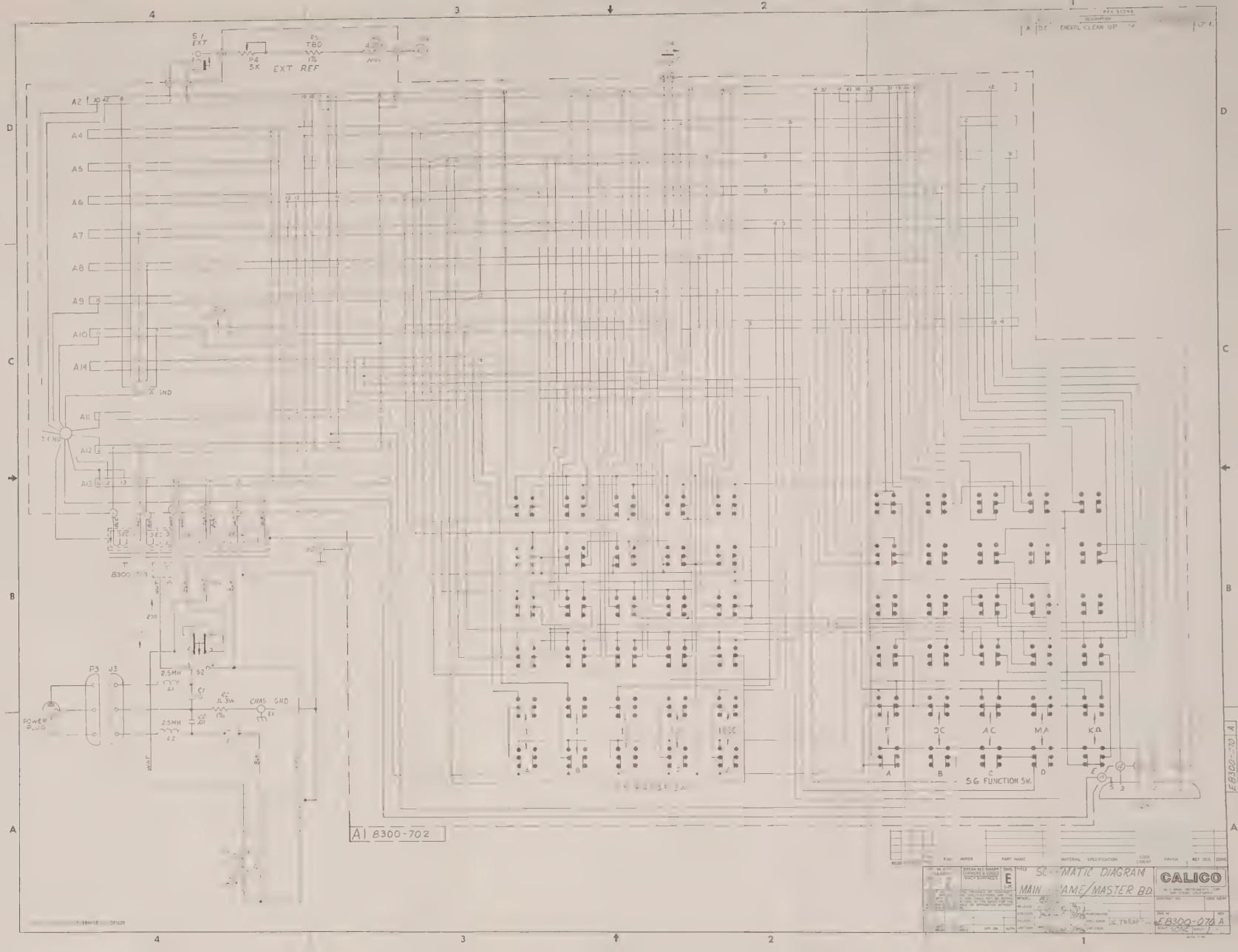

S1 EXT
P4 5K
EXT REF
P5 TBD 1%
A2
A4
A5
A6
A7
A8
A9
A10
A14
A11
A12
A13
8300
P3
J3
POWER PLUG
2.5MH
L1
L2
C1
R2 3W 1%
CHAS GND
E1
F
DC
AC
MA
KΩ
A
B
C
D
E
S6 FUNCTION SW.
A1 8300-702
ENERAL CLEAN UP
SCHEMATIC DIAGRAM
MAIN FRAME/MASTER BD
CALICO
E8300-070 A

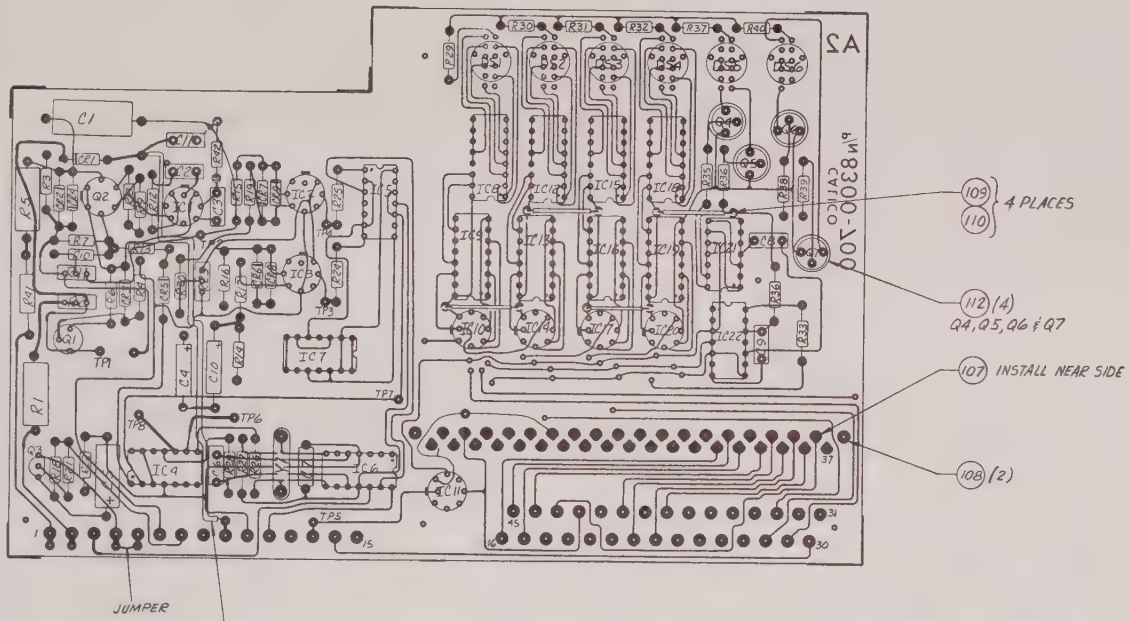

A 2
-1 ASSEMBLY
VIEW COMPONENT SIDE

REV	AUTH	DESCRIPTION	ZONE	EFF ON	DATE	APRD

REQD PER ASSY	ITEM NO	PART NUMBER	PART NAME	MATERIAL — SPECIFICATION	CODE IDENT	FINISH	REF DES	ZONE
	-1	PL8300-700	PARTS LIST	SHEETS 4 & 5				

DIM IN INCHES TOLERANCES .XXX ± .010 .XX ± .03 .X ± .X7
BREAK ALL SHARP CORNERS & EDGES
MACH SURFACES ✓
DWG SIZE D

TITLE ANALOG & DECADE (A2) PC BOARD ASSEMBLY

CALICO
CALIFORNIA INSTRUMENTS CORP
SAN DIEGO, CALIFORNIA

MODEL 8300
RELEASE E. Stuart 4/7
CHECKER [signature] 4/12/9
DESIGN
DRFTSMN T. Brown 2/7
PURCHASING
PROJ ENGR
CHF ENGR

CONTRACT NO
CODE IDENT 16067
DWG NO. D8300-700
REV A
SCALE 2/1
SHEET 2 OF 7

EXCEPT AS OTHERWISE PROVIDED BY CONTRACT, THESE DRAWINGS AND SPECIFICATIONS ARE THE PROPERTY OF CALICO AND SHALL NOT BE REPRODUCED OR COPIED OR USED AS THE BASIS FOR THE MANUFACTURE OR SALE OF APPARATUS WITHOUT WRITTEN PERMISSION.

DASH NO	QTY REQD	NEXT ASSEMBLY	EFF ON	AUTH

1. FOR SCHEMATIC SEE DWG. NO. E8300-071 SHEETS 1, 2 & 3.

NOTES (UNLESS OTHERWISE SPECIFIED)

D8300-700 A

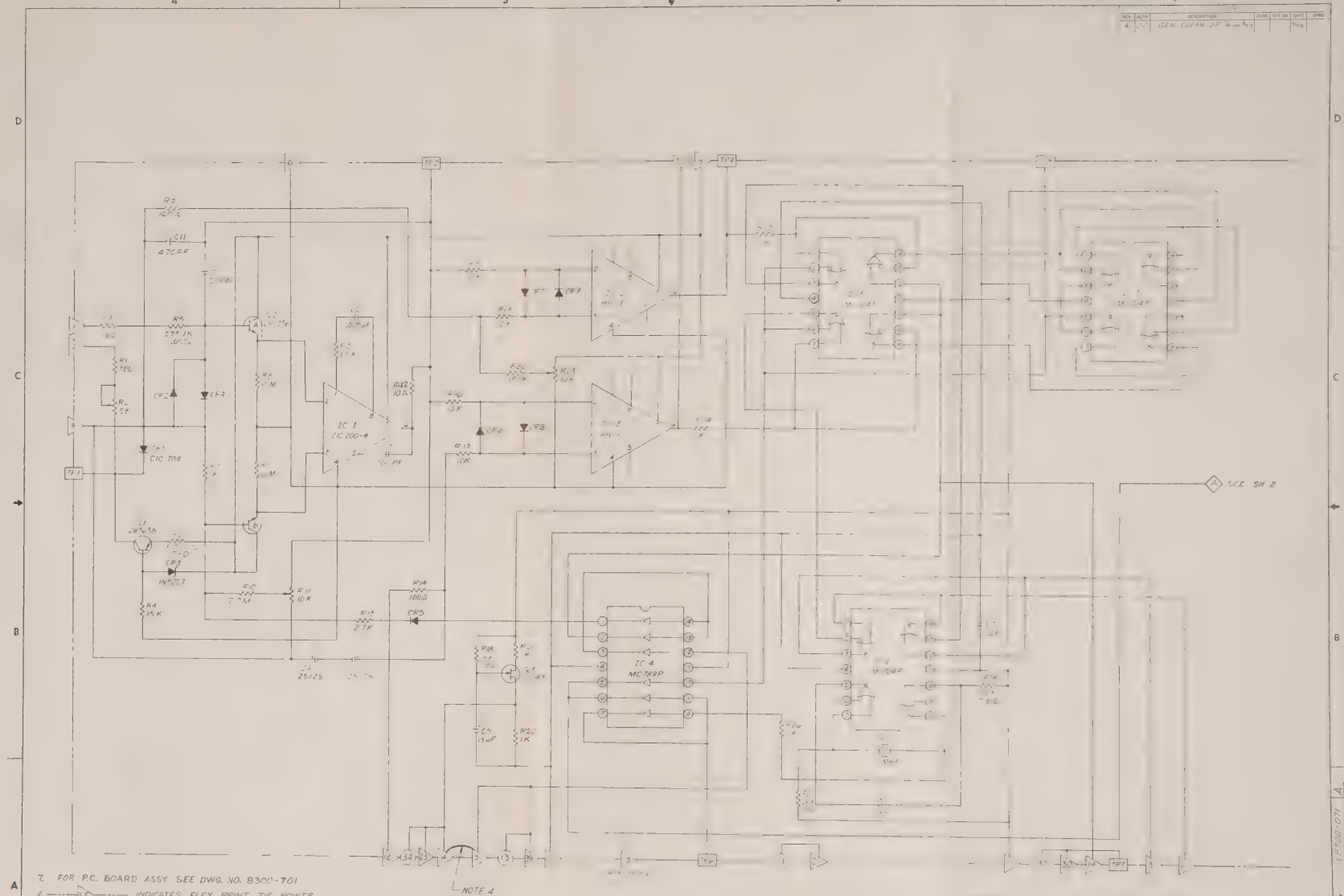

7. FOR P.C. BOARD ASSY SEE DWG. NO. B300-701

6. —— INDICATES FLEX PRINT TIE POINTS.

5. —— INDICATES PRINT BOARD ELCO CONTACTS.

4. JUMPER TO BE REMOVED IF PRINT BOARD #B300-710 IS SUPPLIED.

2. ALL DIODES ARE 1N914.

1. ALL RESISTOR VALUES ARE 1/4W-5%.

NOTES (UNLESS OTHERWISE SPECIFIED)

REV	AUTH	DESCRIPTION	ZONE	CT ON	DATE	APRD
A		GEN CLEAN UP				

ITEM NO	PART NUMBER	PART NAME	MATERIAL SPECIFICATION	CODE IDENT	FINISH	REF DES.	ZONE
REQD PER BOM							

DIM IN INCHES TOLERANCES .XXX ±.010 .XX ±.03 .X ±.1 ANGLES ±1°

BREAK ALL SHARP CORNERS & EQUALLY SMOOTH BEFORE FINISH

FINISH E

PROPRIETARY TO ALCO AND SHALL NOT BE REPRODUCED OR USED IN ANY WAY WITHOUT PERMISSION OR DISCLOSED TO THE GALE OF APPRECIATION WITHOUT WRITTEN PERMISSION.

TITLE SCHEMATIC - DECADE & ANALOG DIAGRAM

CALICO

RELEASE DATE

CHECKED DATE

ENGR DATE

PROJ ENGR DATE

APPROVALS

DATE 1-17-68

DRAWING E B300-071 A

SCALE NONE SHEET 1 OF 3

V6067

1-B300-071

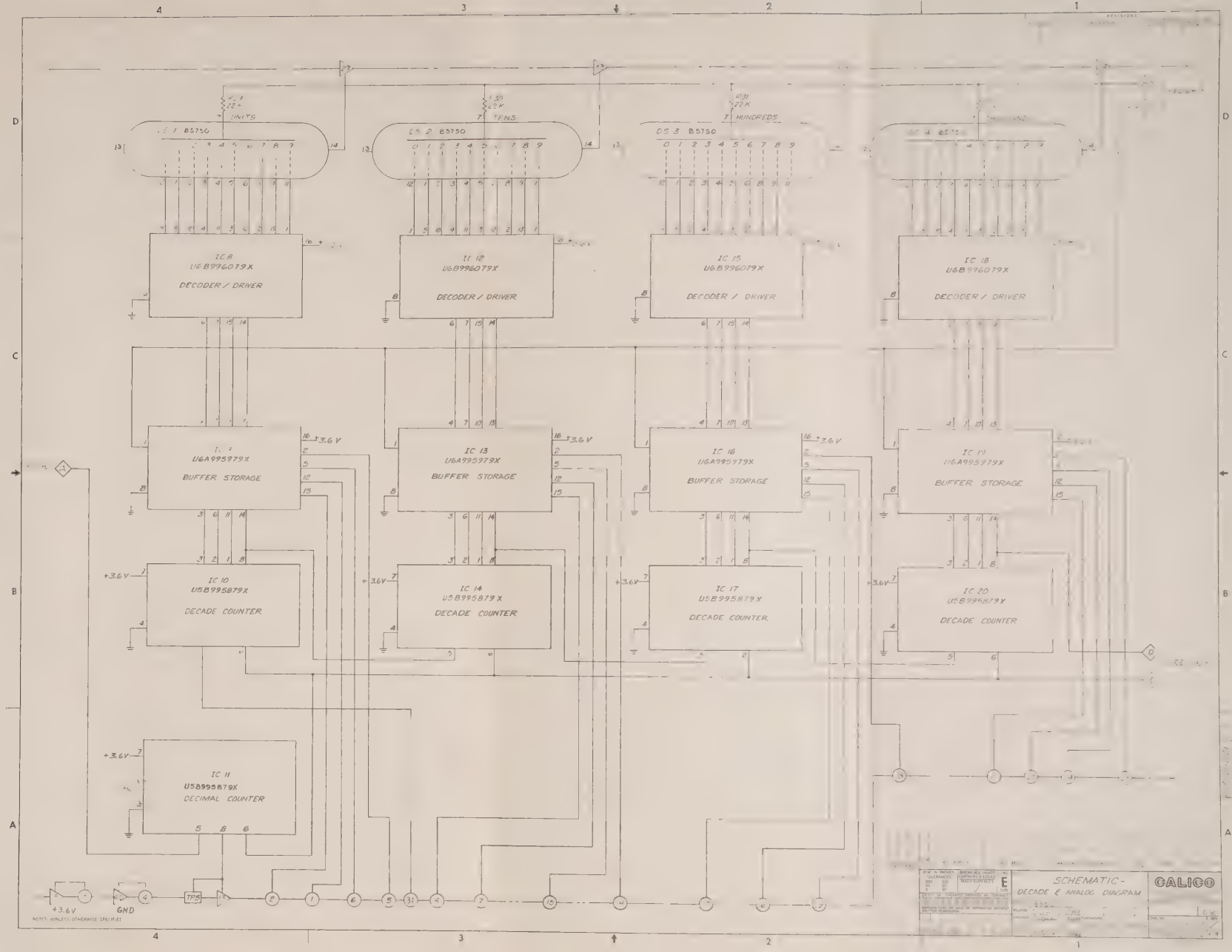
UNITS
TENS
HUNDREDS
DS 1 B5750
DS 2 B5750
DS 3 B5750
IC 8
U6B996079X
DECODER / DRIVER
IC 12
U6B996079X
DECODER / DRIVER
IC 15
U6B996079X
DECODER / DRIVER
IC 18
U6B996079X
DECODER / DRIVER
IC 9
U6A995979X
BUFFER STORAGE
IC 13
U6A995979X
BUFFER STORAGE
IC 16
U6A995979X
BUFFER STORAGE
IC 19
U6A995979X
BUFFER STORAGE
+3.6V
IC 10
U5B995879X
DECADE COUNTER
IC 14
U5B995879X
DECADE COUNTER
IC 17
U5B995879X
DECADE COUNTER
IC 20
U5B995879X
DECADE COUNTER
IC 11
U5B995879X
DECIMAL COUNTER
+3.6V
GND
TP5
NOTES: UNLESS OTHERWISE SPECIFIED
SCHEMATIC-
DECADE & ANALOG DIAGRAM
CALICO

REVISIONS						
REV	AUTH	DESCRIPTION	ZONE	EFF ON	DATE	APRD

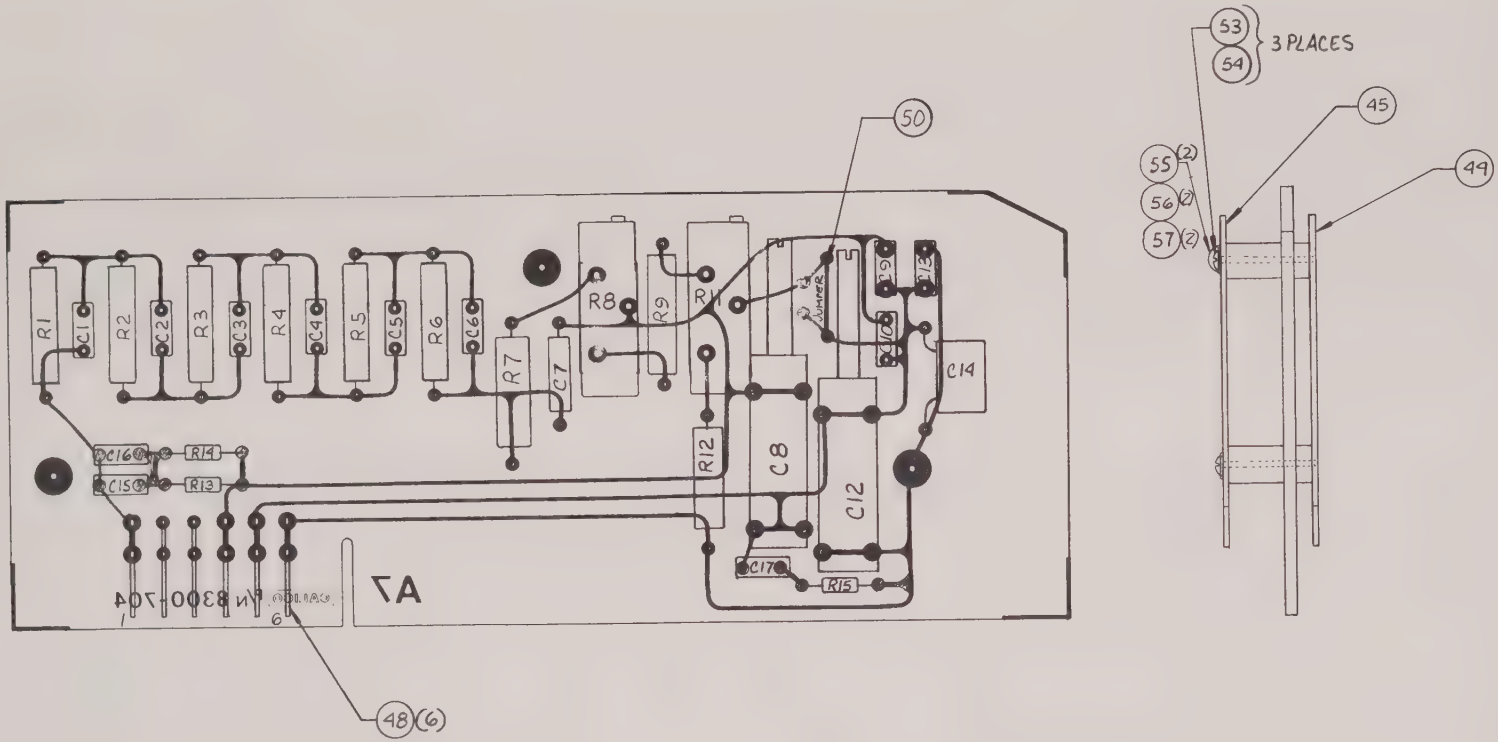

A7
-1 ASSEMBLY
VIEW COMPONENT SIDE

REQD PER ASSY	ITEM NO.	PART NUMBER	PART NAME	MATERIAL — SPECIFICATION	CODE IDENT	FINISH	REF DES.	ZONE
	/	PL 8300-074	PARTS LIST	SHEET 4				
	-1							

DIM IN INCHES TOLERANCES .XXX = .010 .XX = .03 X° = 30'

BREAK ALL SHARP CORNERS & EDGES
MACH SURFACES ✓

DWG SIZE C

TITLE ATTENUATOR "A" (A7)
PC BOARD ASSEMBLY

CALICO
CALIFORNIA INSTRUMENTS CORP.
SAN DIEGO, CALIFORNIA

EXCEPT AS OTHERWISE PROVIDED BY CONTRACT, THESE DRAWINGS AND SPECIFICATIONS ARE THE PROPERTY OF CALICO AND SHALL NOT BE REPRODUCED OR COPIED OR USED AS THE BASIS FOR THE MANUFACTURE OR SALE OF APPARATUS WITHOUT WRITTEN PERMISSION.

DASH NO.	QTY REQD	NEXT ASSEMBLY	EFF ON	AUTH

MODEL	8300			
RELEASE	E. Shultz	2/17/9		
CHECKER	J. Wiener	2/12/9	PURCHASING	
DESIGN			PROJ ENGR	G.S. 2/11/9
DRFTSMN	T. BROWN	1/15/9	CHF ENGR	

CONTRACT NO.
CODE IDENT 16067
DWG NO. C8300-704
REV A
SCALE 2/1
SHEET 2 OF 4

2. MAX. COMPONENT HEIGHT TO BE .40
1. FOR SCHEMATIC SEE DWG. NO. C8300-074.

NOTES: (UNLESS OTHERWISE SPECIFIED)

CALICO F-102

C8300-704 A

REVISIONS						
REV	AUTH	DESCRIPTION	ZONE	EFF ON	DATE	APRD
A	D.C.	GEN CLEAN UP T. BROWN 2/10/69			2/10/69	GT
B	E.O.	INCORP EO # 276 TB 4/10/69				K

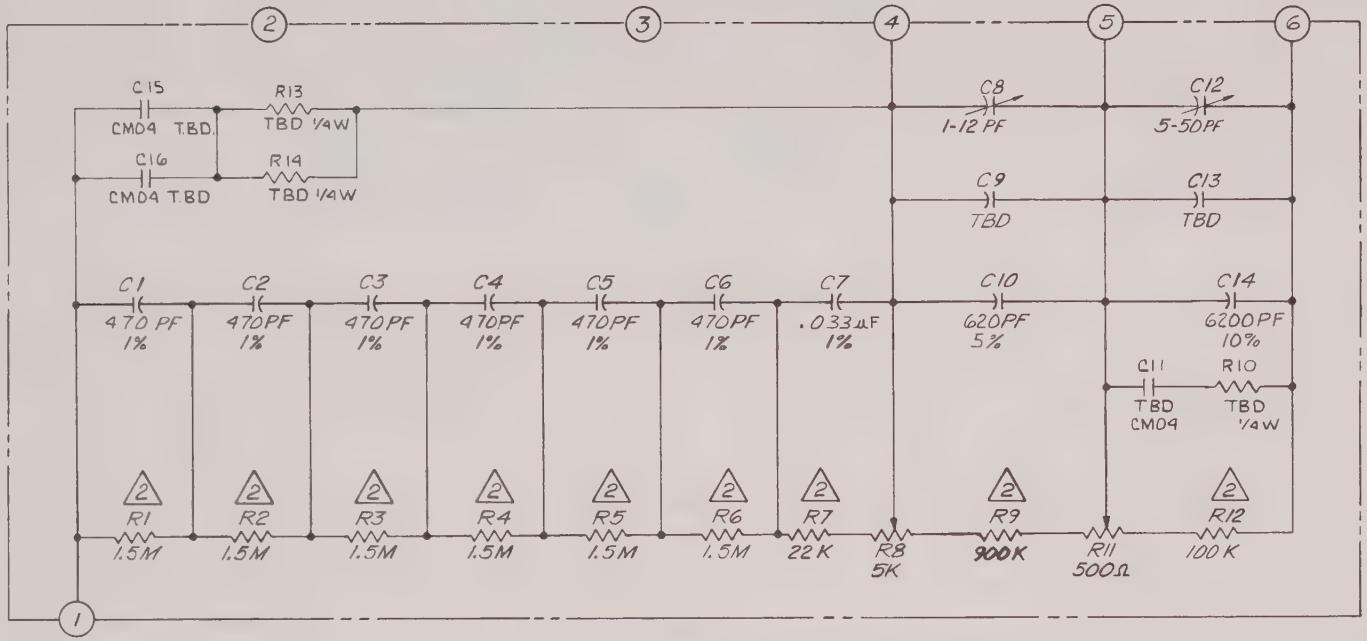

3. FOR P.C. BOARD ASSY. SEE DWG. NO. 8300-704.

2 MATCHED SET CIC-502.

1. ALL RESISTORS ARE 1/4W-5%.

NOTES: (UNLESS OTHERWISE SPECIFIED)

REQD PER ASSY	ITEM NO.	PART NUMBER	PART NAME	MATERIAL — SPECIFICATION	CODE IDENT	FINISH	REF DES.	ZONE

DIM IN INCHES TOLERANCES .XXX = .010 .XX = .03 X° = 30'

BREAK ALL SHARP CORNERS & EDGES MACH SURFACES ✓

DWG SIZE C

EXCEPT AS OTHERWISE PROVIDED BY CONTRACT, THESE DRAWINGS AND SPECIFICATIONS ARE THE PROPERTY OF CALICO AND SHALL NOT BE REPRODUCED OR COPIED OR USED AS THE BASIS FOR THE MANUFACTURE OR SALE OF APPARATUS WITHOUT WRITTEN PERMISSION.

TITLE SCHEMATIC-ATTENUATOR "A" (A7)

MODEL 8300

RELEASE			PURCHASING		
CHECKER	Werner	1/14/69	PROJ ENGR	GT	1-14-69
DESIGN			CHF ENGR		
DRFTSMN	J. Kelly	12/9/68			

DASH NO	QTY REQD	NEXT ASSEMBLY	EFF ON	AUTH

CALICO
CALIFORNIA INSTRUMENTS CORP
SAN DIEGO, CALIFORNIA

CONTRACT NO. | CODE IDENT 16067

DWG NO. C8300-074 | REV B

SCALE NONE | SHEET 1 OF 1

CALICO F 102

C8300-074 B

REVISIONS						
REV	AUTH	DESCRIPTION	ZONE	EFF ON	DATE	APRD

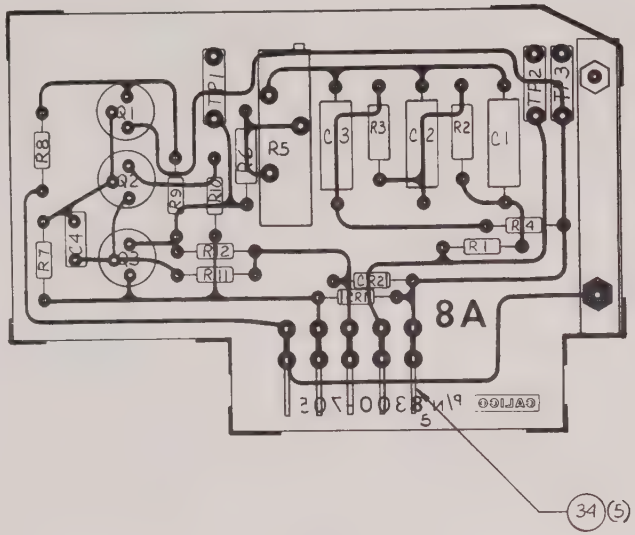

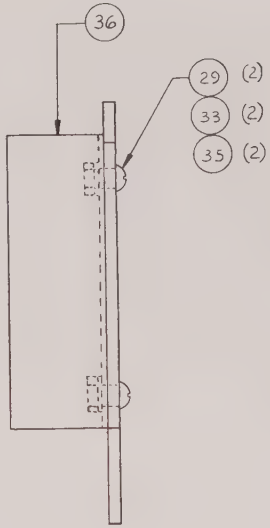

A8
-1 ASSEMBLY
VIEW COMPONENT SIDE

2. MAX. COMPONENT HEIGHT TO BE .50
1. FOR SCHEMATIC SEE DWG NO. C8300-075.

NOTES (UNLESS OTHERWISE SPECIFIED)

REQD PER ASSY	ITEM NO.	PART NUMBER	PART NAME	MATERIAL — SPECIFICATION	CODE IDENT	FINISH	REF DES.	ZONE
-1		PL8300-705	PARTS LIST	SHEET 4				

DIM IN INCHES TOLERANCES .XXX = .010 .XX = .03 X° = 30'
BREAK ALL SHARP CORNERS & EDGES
MACH SURFACES ✓
DWG SIZE C

EXCEPT AS OTHERWISE PROVIDED BY CONTRACT, THESE DRAWINGS AND SPECIFICATIONS ARE THE PROPERTY OF CALICO AND SHALL NOT BE REPRODUCED OR COPIED OR USED AS THE BASIS FOR THE MANUFACTURE OR SALE OF APPARATUS WITHOUT WRITTEN PERMISSION.

TITLE FILTER BOARD (A8)
PC BOARD ASSEMBLY
MODEL 8300

RELEASE	[illegible]	8/7/9	PURCHASING	
CHECKER	[illegible]	2/2/9	PROJ ENGR	
DESIGN			CHF ENGR	
DRFTSMN	T BROWN	1/16/9		

DASH NO.	QTY REQD	NEXT ASSEMBLY	EFF ON	AUTH

CALICO
CALIFORNIA INSTRUMENTS CORP
SAN DIEGO, CALIFORNIA
CONTRACT NO.
CODE IDENT 16067
DWG NO. C8300-705
REV. 1
SCALE 2/1
SHEET 2 OF 4

CALICO F 102

REVISIONS						
REV	AUTH	DESCRIPTION	ZONE	EFF ON	DATE	APRD
A	D.C.	GEN CLEAN UP T. BROWN 2/10/9			2/10/9	GT

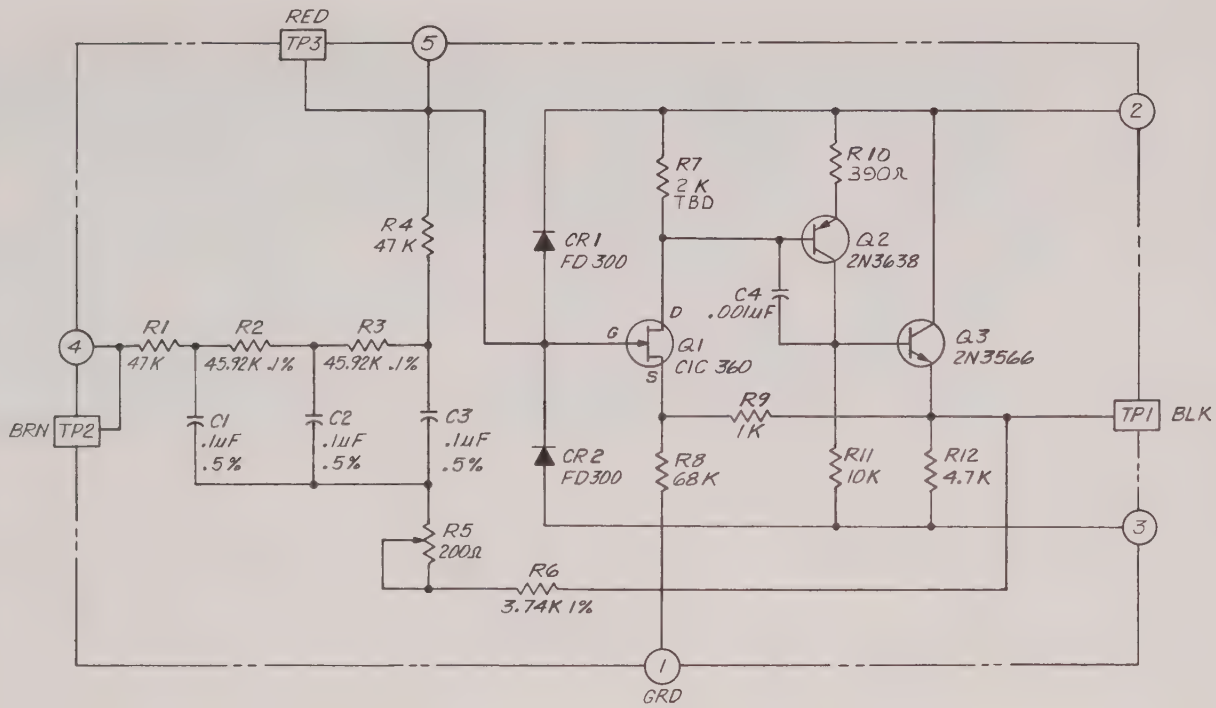

REQD PER ASSY	ITEM NO.	PART NUMBER	PART NAME	MATERIAL — SPECIFICATION	CODE IDENT	FINISH	REF DES.	ZONE

DIM IN INCHES
TOLERANCES
.XXX = .010
.XX = .03
X° = 30'

BREAK ALL SHARP CORNERS & EDGES
MACH SURFACES √

DWG SIZE C

TITLE
SCHEMATIC - FILTER
(A8)

CALICO
CALIFORNIA INSTRUMENTS CORP
SAN DIEGO, CALIFORNIA

EXCEPT AS OTHERWISE PROVIDED BY CONTRACT, THESE DRAWINGS AND SPECIFICATIONS ARE THE PROPERTY OF CALICO, AND SHALL NOT BE REPRODUCED OR COPIED OR USED AS THE BASIS FOR THE MANUFACTURE OR SALE OF APPARATUS WITHOUT WRITTEN PERMISSION.

MODEL 8300
RELEASE
CHECKER 1/14/9
DESIGN
DRFTSMN J. Kelly 12/4/68
PURCHASING
PROJ ENGR GT 1-19-69
CHF ENGR

CONTRACT NO.
CODE IDENT 16067
DWG NO. C 8300-075
REV A
SCALE NONE
SHEET 1 OF 1

DASH NO.	QTY REQD	NEXT ASSEMBLY	EFF ON	AUTH

2. FOR P.C. BOARD ASSY. SEE DWG. NO. 8300-705.

1. ALL RESISTORS ARE 1/4W-5%.

NOTES: (UNLESS OTHERWISE SPECIFIED)

C8300-075 A

CALICO F-102

REVISIONS						
REV	AUTH	DESCRIPTION	ZONE	EFF ON	DATE	APRD

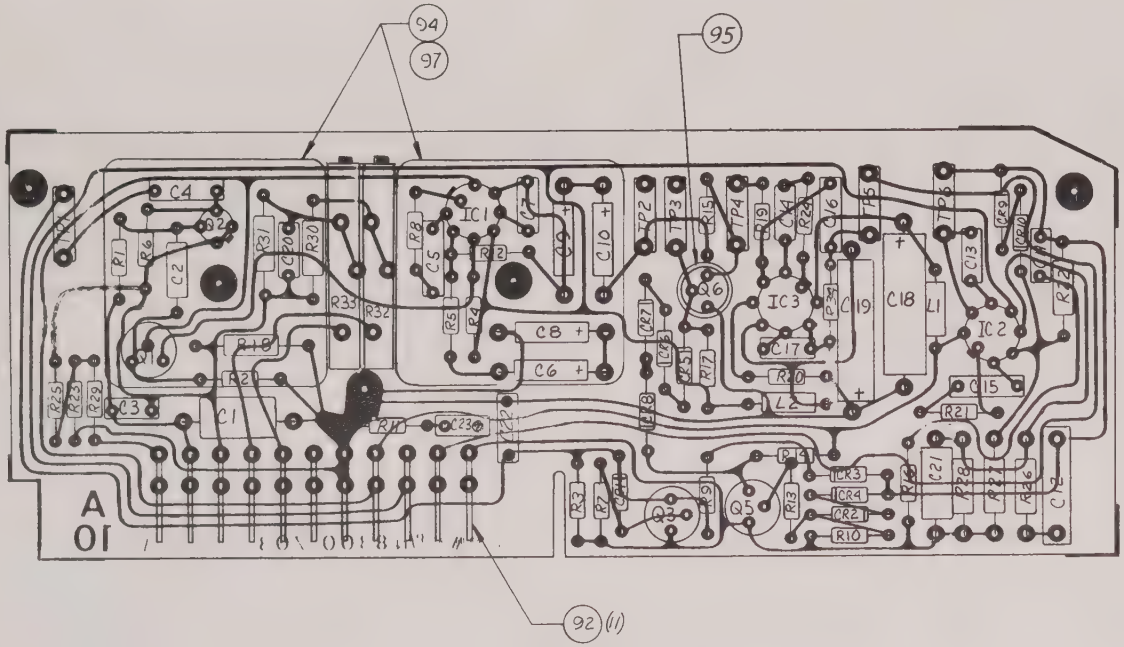

A 10
-1 ASSEMBLY
VIEW COMPONENT SIDE

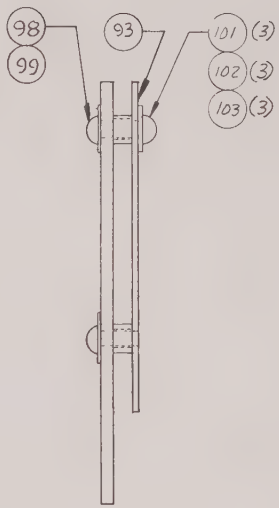

END VIEW

REQD PER ASSY		ITEM NO.	PART NUMBER	PART NAME	MATERIAL — SPECIFICATION	CODE IDENT	FINISH	REF DES.	ZONE
	/		PL8300-703	PARTS LIST	SHEET 4,5&6				
	-1								

DIM IN INCHES TOLERANCES .XXX = .010 .XX = .03 X° = 30'

BREAK ALL SHARP CORNERS & EDGES MACH SURFACES ✓

DWG SIZE C

TITLE PREAMPLIFER BOARD (A10)
P.C. BOARD ASSEMBLY

CALICO
CALIFORNIA INSTRUMENTS CORP.
SAN DIEGO, CALIFORNIA

EXCEPT AS OTHERWISE PROVIDED BY CONTRACT, THESE DRAWINGS AND SPECIFICATIONS ARE THE PROPERTY OF CALICO AND SHALL NOT BE REPRODUCED OR COPIED OR USED AS THE BASIS FOR THE MANUFACTURE OR SALE OF APPARATUS WITHOUT WRITTEN PERMISSION.

MODEL	8300				
RELEASE		2/17/69			
CHECKER		2/12/69	PURCHASING		
DESIGN			PROJ ENGR	G.T.	2-12-69
DRFTSMN	T BROWN	1/17/69	CHF ENGR		

CONTRACT NO.
CODE IDENT 16067
DWG NO. C8300-703
REV A
SCALE 2/1
SHEET 2 OF 6

DASH NO.	QTY REQD	NEXT ASSEMBLY	EFF ON	AUTH

2. MAX. COMPONENT HEIGHT TO BE .62
1. FOR SCHEMATIC SEE DWG. NO. D8300-073.

NOTES: (UNLESS OTHERWISE SPECIFIED)

CALICO F-102

C8300-703 A

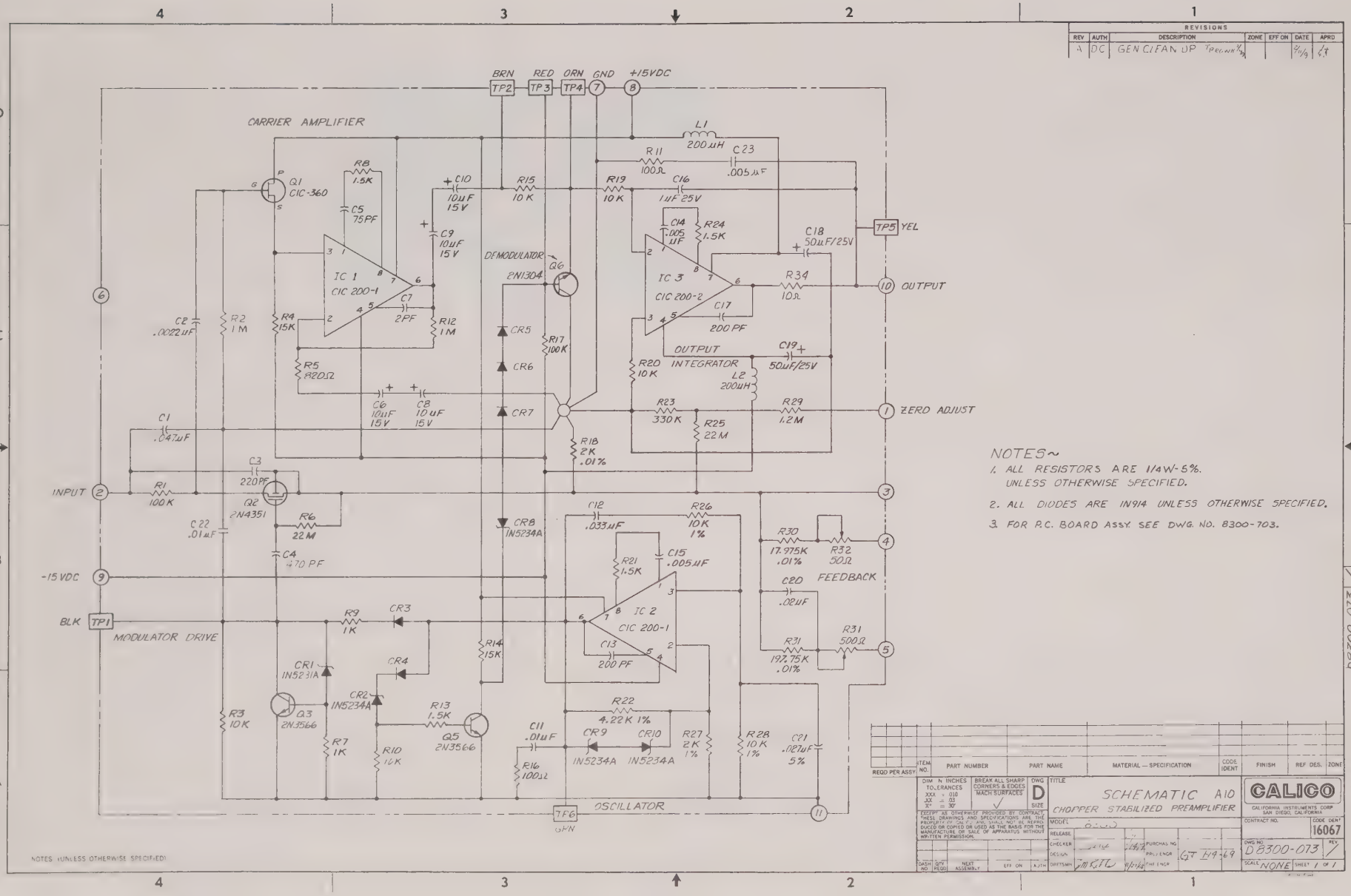

REVISIONS
REV | AUTH | DESCRIPTION | ZONE | EFF ON | DATE | APRD
A | DC | GEN CLEAN UP
BRN TP2
RED TP3
ORN TP4
GND 7
+15VDC 8
CARRIER AMPLIFIER
Q1 CIC-360
R8 1.5K
C5 75PF
C10 10uF 15V
C9 10uF 15V
R15 10K
R19 10K
L1 200uH
R11 100Ω
C23 .005uF
C16 1uF 25V
C14 .005 uF
R24 1.5K
C18 50uF/25V
TP5 YEL
IC 1 CIC 200-1
C7 2PF
R12 1M
DEMODULATOR
Q6 2N1304
IC 3 CIC 200-2
R34 10Ω
10 OUTPUT
C17 200 PF
C2 .0022uF
R2 1M
R4 15K
R5 820Ω
CR5
CR6
CR7
R17 100K
OUTPUT INTEGRATOR
C19 50uF/25V
R20 10K
L2 200uH
C6 10uF 15V
C8 10uF 15V
R23 330K
R25 22M
R29 1.2M
1 ZERO ADJUST
C1 .047uF
R18 2K .01%
C3 220PF
INPUT 2
R1 100K
Q2 2N4351
R6 22M
C22 .01uF
C4 470 PF
CR8 1N5234A
C12 .033uF
R26 10K 1%
R30 17.975K .01%
R32 50Ω
4
FEEDBACK
-15VDC 9
R21 1.5K
C15 .005uF
C20 .02uF
BLK TP1
MODULATOR DRIVE
R9 1K
CR3
IC 2 CIC 200-1
C13 200 PF
R31 197.75K .01%
R31 500Ω
5
R14 15K
CR1 1N5231A
CR4
CR2 1N5234A
R3 10K
Q3 2N3566
R7 1K
R10 10K
R13 1.5K
Q5 2N3566
R22 4.22K 1%
C11 .01uF
CR9 1N5234A
CR10 1N5234A
R27 2K 1%
R28 10K 1%
C21 .027uF 5%
R16 100Ω
TP6 GRN
OSCILLATOR
11
NOTES (UNLESS OTHERWISE SPECIFIED)
NOTES~
1. ALL RESISTORS ARE 1/4W-5%. UNLESS OTHERWISE SPECIFIED.
2. ALL DIODES ARE 1N914 UNLESS OTHERWISE SPECIFIED.
3. FOR P.C. BOARD ASSY. SEE DWG. NO. 8300-703.
REQD PER ASSY | ITEM NO. | PART NUMBER | PART NAME | MATERIAL — SPECIFICATION | CODE IDENT | FINISH | REF DES. | ZONE
DIM IN INCHES TOLERANCES XXX ± .010 XX ± .03 X° ± 30'
BREAK ALL SHARP CORNERS & EDGES MACH SURFACES
DWG SIZE D
TITLE SCHEMATIC A10 CHOPPER STABILIZED PREAMPLIFIER
CALICO CALIFORNIA INSTRUMENTS CORP SAN DIEGO, CALIFORNIA
CONTRACT NO.
CODE IDENT 16067
DWG NO. D8300-073
REV /
SCALE NONE
SHEET 1 OF 1
D8300-073

REVISIONS						
REV	AUTH	DESCRIPTION	ZONE	EFF ON	DATE	APRD

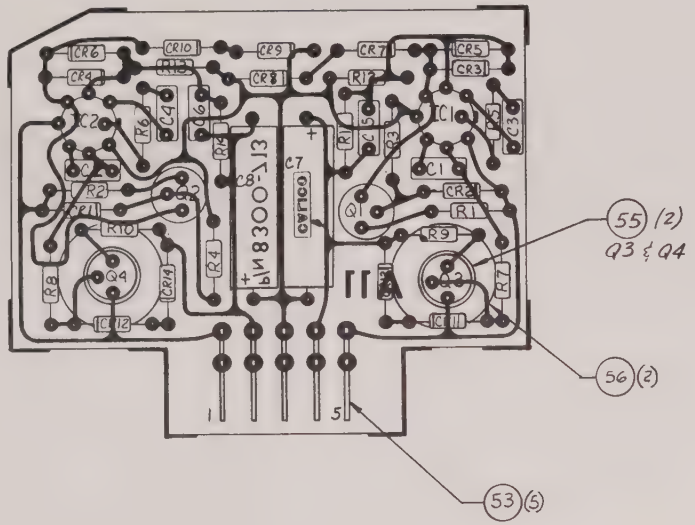

A 11
-1 ASSEMBLY
VIEW COMPONENT SIDE

REQD PER ASSY	ITEM NO.	PART NUMBER	PART NAME	MATERIAL — SPECIFICATION	CODE IDENT	FINISH	REF DES.	ZONE
	-1	PL8300-713	PARTS LIST	SHEET 4				

DASH NO.	QTY REQD	NEXT ASSEMBLY	EFF ON	AUTH

DIM IN INCHES
TOLERANCES
.XXX = .010
.XX = .03
X° = 30'

BREAK ALL SHARP CORNERS & EDGES
MACH SURFACES ✓

DWG SIZE C

EXCEPT AS OTHERWISE PROVIDED BY CONTRACT, THESE DRAWINGS AND SPECIFICATIONS ARE THE PROPERTY OF CALICO AND SHALL NOT BE REPRODUCED OR COPIED OR USED AS THE BASIS FOR THE MANUFACTURE OR SALE OF APPARATUS WITHOUT WRITTEN PERMISSION.

TITLE POWER SUPPLY #3 (A11)
P.C. BOARD ASSEMBLY

MODEL

RELEASE	E. Shultz	2/17/69	PURCHASING	
CHECKER	[illegible]	2/21/69	PROJ ENGR	[illegible] 2/21/69
DESIGN			CHF ENGR	
DRFTSMN	T BROWN	1/16/69		

CALICO
CALIFORNIA INSTRUMENTS CORP.
SAN DIEGO, CALIFORNIA

CONTRACT NO.
CODE IDENT 16067
DWG NO. C8300-713
REV /
SCALE 2/1
SHEET 2 OF 5

CALICO F-102

2. MAX. COMPONENT HEIGHT TO BE .45
1. FOR SCHEMATIC SEE DWG. NO. D8300-083.

NOTES: (UNLESS OTHERWISE SPECIFIED)

D8300-713

REVISIONS						
REV	AUTH	DESCRIPTION	ZONE	EFF ON	DATE	APRD
A	DC	GEN CLEAN UP Brown 2/11/9			2/11/9	[illegible]

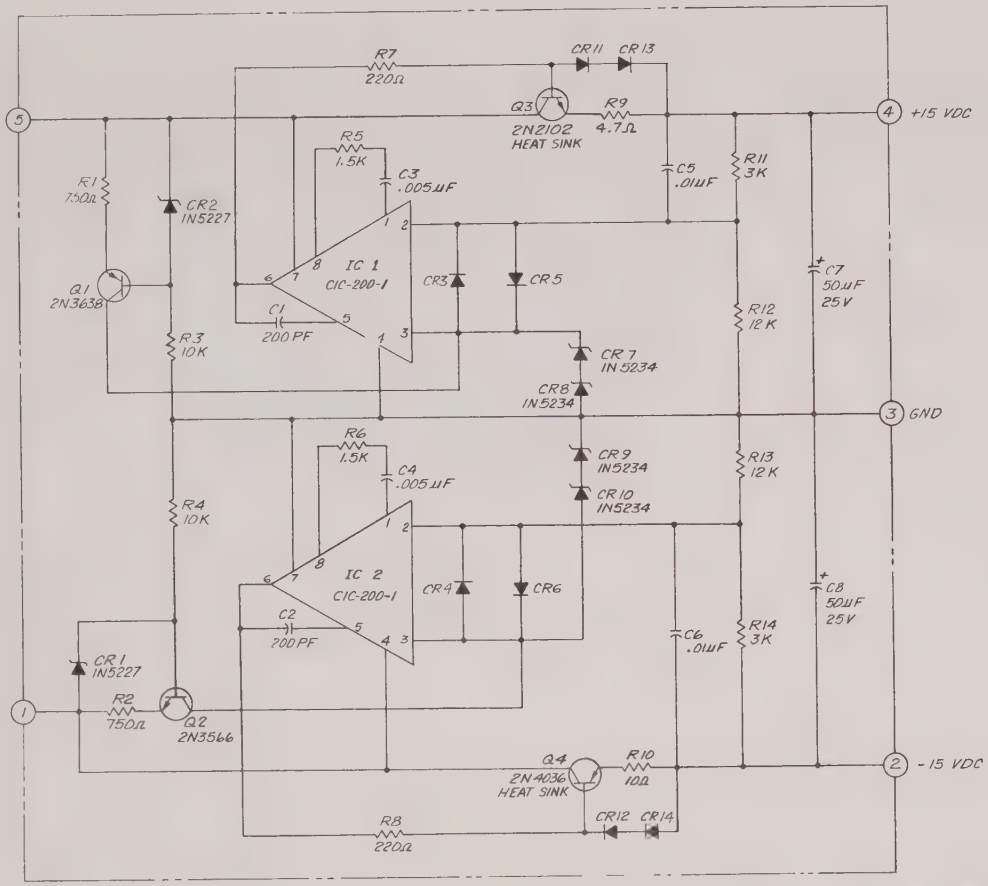

3. FOR P.C. BOARD ASSY SEE DWG NO 8300 7 3
2. ALL DIODES ARE IN914.
1. ALL RESISTORS ARE 1/4 W-5%.
NOTES (UNLESS OTHERWISE SPECIFIED)

REQD PER ASSY	ITEM NO	PART NUMBER	PART NAME	MATERIAL — SPECIFICATION	CODE IDENT	FINISH	REF DES	ZONE

DIM IN INCHES TOLERANCES XXX .010 XX ± .03 X ± .30
BREAK ALL SHARP CORNERS & EDGES MACH SURFACES √
DWG SIZE D

EXCEPT AS OTHERWISE PROVIDED BY CONTRACT, THESE DRAWINGS AND SPECIFICATIONS ARE THE PROPERTY OF CALICO AND SHALL NOT BE REPRODUCED OR COPIED OR USED AS THE BASIS FOR THE MANUFACTURE OR SALE OF APPARATUS WITHOUT WRITTEN PERMISSION

TITLE SCHEMATIC - POWER SUPPLY NO. 3 (All)

MODEL 8300
RELEASE
CHECKER [illegible] 1/14/9
DESIGN
DRFTSMN J. Villa 12/9/68
PURCHASING
PROJ ENGR GT 1/14/69
CHF ENGR

CALICO
CALIFORNIA INSTRUMENTS CORP
SAN DIEGO, CALIFORNIA
CONTRACT NO
CODE IDENT 16067
DWG NO D8300-083
REV √
SCALE NONE
SHEET 1 OF 1

D8300-083 √

REVISIONS						
REV	AUTH	DESCRIPTION	ZONE	EFF ON	DATE	APRD

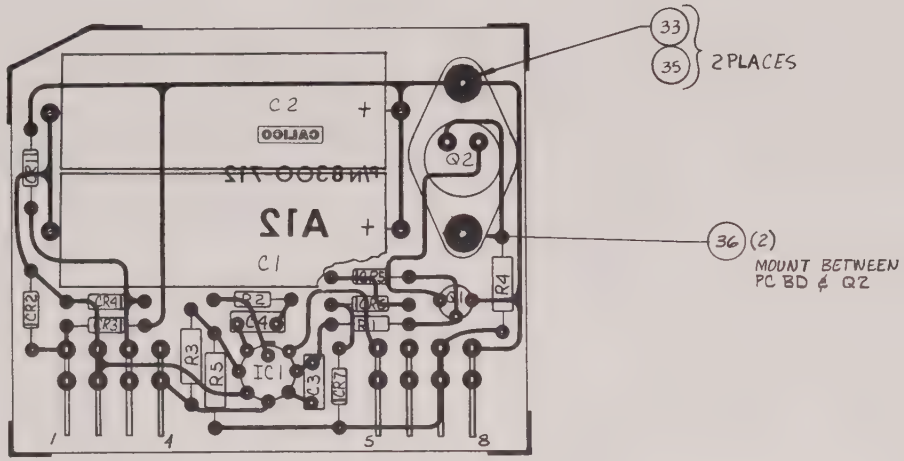

A12
-1 ASSEMBLY
VIEW COMPONENT SIDE

2. MAX. COMPONENT HEIGHT TO BE .80

1. FOR SCHEMATIC SEE DWG. NO. C8300-082

NOTES: (UNLESS OTHERWISE SPECIFIED)

PL8300-712 PARTS LIST SHEET 4

REQD PER ASSY	ITEM NO.	PART NUMBER	PART NAME	MATERIAL — SPECIFICATION	CODE IDENT	FINISH	REF DES.	ZONE
-1								

DIM IN INCHES TOLERANCES .XXX = .010 .XX = .03 X° = 30'

BREAK ALL SHARP CORNERS & EDGES "MACH SURFACES" ✓

DWG SIZE C

EXCEPT AS OTHERWISE PROVIDED BY CONTRACT, THESE DRAWINGS AND SPECIFICATIONS ARE THE PROPERTY OF CALICO AND SHALL NOT BE REPRODUCED OR COPIED OR USED AS THE BASIS FOR THE MANUFACTURE OR SALE OF APPARATUS WITHOUT WRITTEN PERMISSION.

DASH NO.	QTY REQD	NEXT ASSEMBLY	EFF ON	AUTH

TITLE POWER SUPPLY #2 (A12)
P.C. BOARD ASSEMBLY

MODEL 8300

RELEASE	E. Shultz	7/1/9		
CHECKER	Spencer	2/12/9	PURCHASING	
DESIGN			PROJ ENGR	G. To 3/12/69
DRFTSMN	T BROWN	1/16/9	CHF ENGR	

CALICO
CALIFORNIA INSTRUMENTS CORP.
SAN DIEGO, CALIFORNIA

CONTRACT NO.

CODE IDENT 16067

DWG NO. C8300-712 REV A

SCALE 2/1 SHEET 2 OF 4

CALICO F-348

C8300-712 A

REVISIONS						
REV	AUTH	DESCRIPTION	ZONE	EFF ON	DATE	APRD
A	D.C.	GEN CLEAN UP T BROWN 3/11/9			3/11/9	

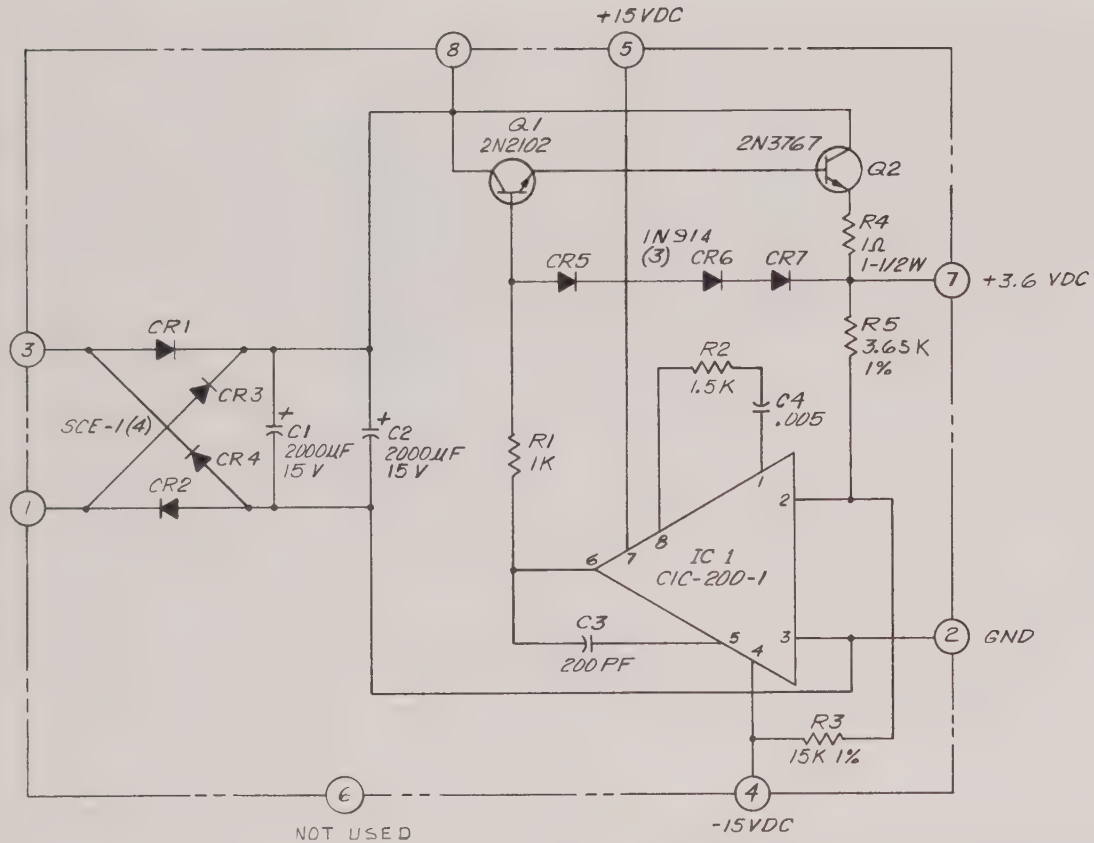

REQD PER ASSY	ITEM NO.	PART NUMBER	PART NAME	MATERIAL — SPECIFICATION	CODE IDENT	FINISH	REF DES.	ZONE

DIM IN INCHES
TOLERANCES
.XXX = .010
.XX = .03
X° = 30'

BREAK ALL SHARP CORNERS & EDGES
MACH SURFACES ✓

DWG SIZE C

EXCEPT AS OTHERWISE PROVIDED BY CONTRACT, THESE DRAWINGS AND SPECIFICATIONS ARE THE PROPERTY OF CALICO AND SHALL NOT BE REPRODUCED OR COPIED OR USED AS THE BASIS FOR THE MANUFACTURE OR SALE OF APPARATUS WITHOUT WRITTEN PERMISSION.

TITLE
SCHEMATIC
POWER SUPPLY NO. 2 (A12)

MODEL 8300

RELEASE
CHECKER 1/14/9 PURCHASING
DESIGN PROJ ENGR GT 1-14-69
DRFTSMN 12/1/68 CHF ENGR

DASH NO.	QTY REQD	NEXT ASSEMBLY	EFF ON	AUTH

CALICO
CALIFORNIA INSTRUMENTS CORP.
SAN DIEGO, CALIFORNIA

CONTRACT NO.
CODE IDENT 16067
DWG NO. C8300-082 REV /
SCALE NONE SHEET 1 OF 1

CALICO F-102

2. FOR P.C. BOARD ASSY. SEE DWG. NO. 8300-712.

1. ALL RESISTORS ARE 1/4W-5%.

NOTES (UNLESS OTHERWISE SPECIFIED)

C8300-082 /

REVISIONS						
REV	AUTH	DESCRIPTION	ZONE	EFF ON	DATE	APRD

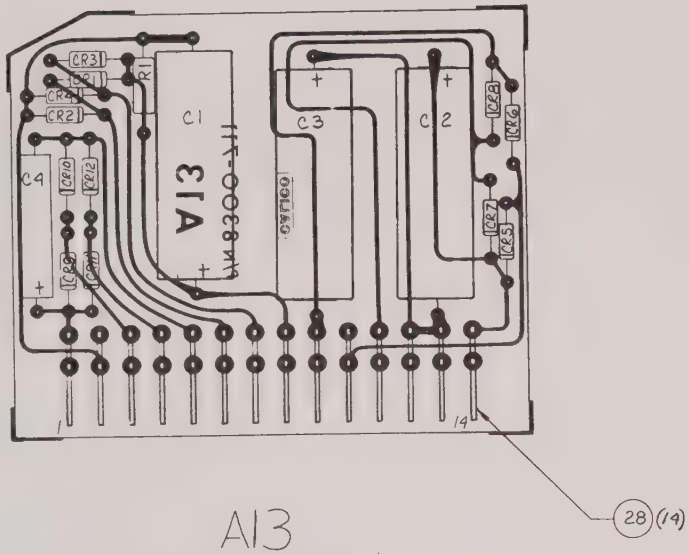

A13
-1 ASSEMBLY
VIEW COMPONENT SIDE

REQD PER ASSY	ITEM NO.	PART NUMBER	PART NAME	MATERIAL — SPECIFICATION	CODE IDENT	FINISH	REF DES.	ZONE
/		PL8300-711	PARTS LIST	SHEET 4				
-1								

DIM IN INCHES
TOLERANCES
.XXX = .010
.XX = .03
X° = 30'

BREAK ALL SHARP CORNERS & EDGES
MACH SURFACES ✓

DWG SIZE C

TITLE POWER SUPPLY #1
P.C. BOARD ASSEMBLY (A13)

CALICO
CALIFORNIA INSTRUMENTS CORP
SAN DIEGO, CALIFORNIA

EXCEPT AS OTHERWISE PROVIDED BY CONTRACT, THESE DRAWINGS AND SPECIFICATIONS ARE THE PROPERTY OF CALICO, AND SHALL NOT BE REPRODUCED OR COPIED OR USED AS THE BASIS FOR THE MANUFACTURE OR SALE OF APPARATUS WITHOUT WRITTEN PERMISSION.

MODEL 8300
RELEASE [signature] 2/7/9
CHECKER [signature] 2/12/9
DESIGN
DRFTSMN T BROWN 1/5/9
PURCHASING
PROJ ENGR [signature] 2/11/69
CHF ENGR

CONTRACT NO.
CODE IDENT 16067
DWG NO. C8300-711
REV /
SCALE 2/1
SHEET 2 OF 4

DASH NO.	QTY REQD	NEXT ASSEMBLY	EFF ON	AUTH

2. MAX. COMPONENT HEIGHT TO BE .80
1. FOR SCHEMATIC SEE DWG NO. C8300-081

NOTES: (UNLESS OTHERWISE SPECIFIED)

C8300-711 /

CALICO F-102

REVISIONS						
REV	AUTH	DESCRIPTION	ZONE	EFF ON	DATE	APRD

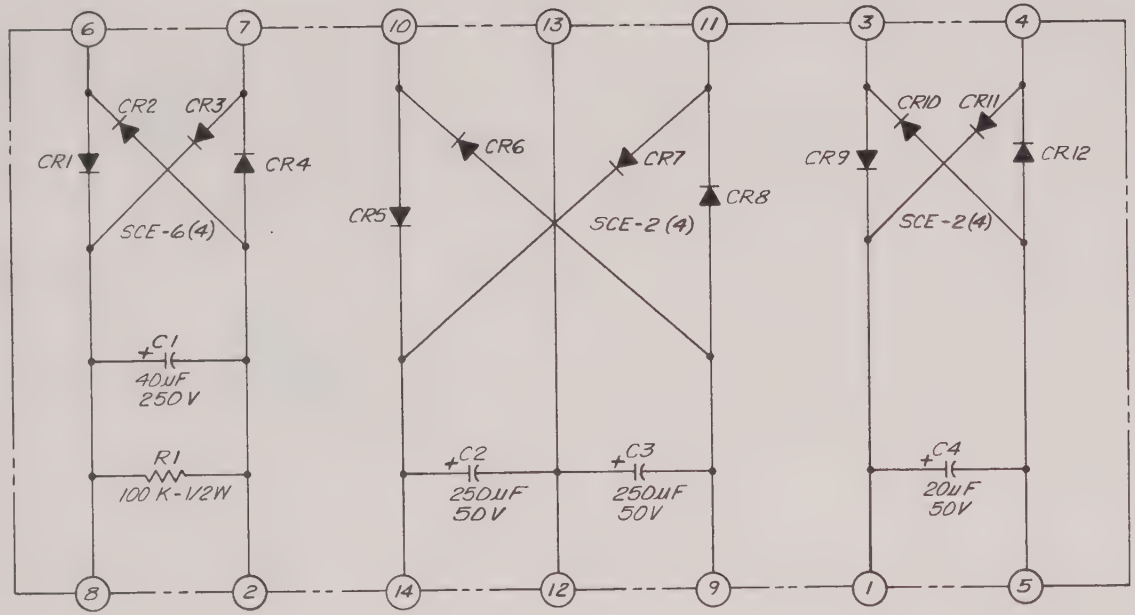

2. FOR P.C. BOARD ASSY. SEE DWG. NO. 8300-711.

1. ALL RESISTORS ARE 1/4W-5%.

NOTES (UNLESS OTHERWISE SPECIFIED)

REQD PER ASSY	ITEM NO.	PART NUMBER	PART NAME	MATERIAL — SPECIFICATION	CODE IDENT	FINISH	REF DES.	ZONE

DIM IN INCHES TOLERANCES .XXX = .010 .XX = .03 X° = 30'

BREAK ALL SHARP CORNERS & EDGES MACH SURFACES ✓

DWG SIZE C

EXCEPT AS OTHERWISE PROVIDED BY CONTRACT, THESE DRAWINGS AND SPECIFICATIONS ARE THE PROPERTY OF CALICO, AND SHALL NOT BE REPRODUCED OR COPIED OR USED AS THE BASIS FOR THE MANUFACTURE OR SALE OF APPARATUS WITHOUT WRITTEN PERMISSION.

TITLE SCHEMATIC POWER SUPPLY NO. 1 (A13)

MODEL 8300

RELEASE

CHECKER 1/14/69 PURCHASING

DESIGN PROJ ENGR GT 1-14-69

DRFTSMN 1/14/69 CHF ENGR

DASH NO.	QTY REQD	NEXT ASSEMBLY	EFF ON	AUTH

CALICO
CALIFORNIA INSTRUMENTS CORP.
SAN DIEGO, CALIFORNIA

CONTRACT NO.

CODE IDENT 16067

DWG NO. C8300-081 REV 1

SCALE NONE SHEET 1 OF 1

CAL CO F 102

C8300-081 1

REVISIONS						
REV	AUTH	DESCRIPTION	ZONE	EFF ON	DATE	APRD

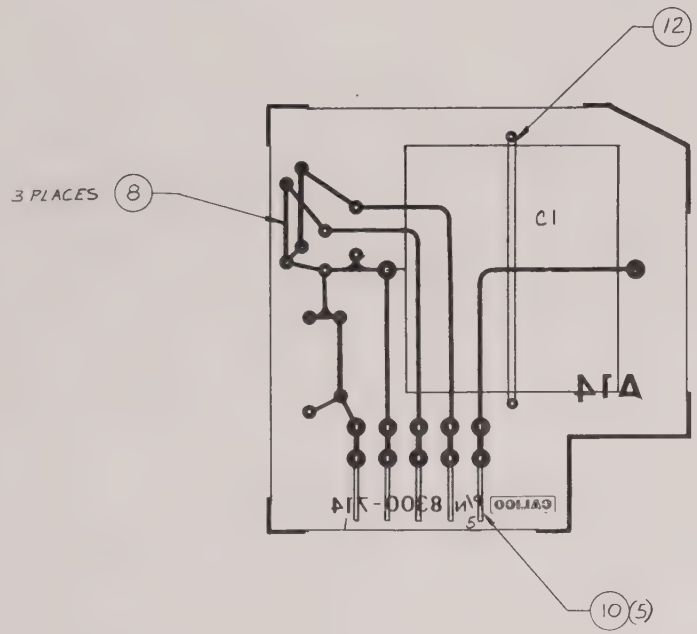

A 14
-1 ASSEMBLY
VIEW COMPONENT SIDE

2. MAX. COMPONENT HEIGT TO BE .70
1. FOR SCHEMATIC SEE DWG. NO. B8300-084.

NOTES (UNLESS OTHERWISE SPECIFIED)

REQD PER ASSY	ITEM NO.	PART NUMBER	PART NAME	MATERIAL — SPECIFICATION	CODE IDENT	FINISH	REF DES.	ZONE
		PL8300-714	PARTS LIST	SHEET 4				
	-1							

DIM IN INCHES TOLERANCES .XXX = .010 .XX = .03 X° = 30'

BREAK ALL SHARP CORNERS & EDGES MACH SURFACES ✓

DWG SIZE C

TITLE ATTENUATOR "B" (A14) P.C. BOARD ASSEMBLY

CALICO
CALIFORNIA INSTRUMENTS CORP
SAN DIEGO, CALIFORNIA

EXCEPT AS OTHERWISE PROVIDED BY CONTRACT, THESE DRAWINGS AND SPECIFICATIONS ARE THE PROPERTY OF CALICO AND SHALL NOT BE REPRODUCED OR COPIED OR USED AS THE BASIS FOR THE MANUFACTURE OR SALE OF APPARATUS WITHOUT WRITTEN PERMISSION.

MODEL	8300			CONTRACT NO.	CODE IDENT 16067
RELEASE	[illegible]	2/7/69			
CHECKER	[illegible]	2/12/69	PURCHASING	DWG NO. C8300-714	REV
DESIGN			PROJ ENGR		
DRFTSMN	T. BROWN	1/3/69	CHF ENGR	SCALE 2/1	SHEET 2 OF 4

DASH NO	QTY REQD	NEXT ASSEMBLY	EFF ON	AUTH

CALICO F-102

C8300-714

B8300-084 | A

REVISIONS						
REV	AUTH	DESCRIPTION	ZONE	EFF ON	DATE	APRD
A	D.C.	GEN CLEAN UP T BROWN 2/10/9			2/10/9	GT

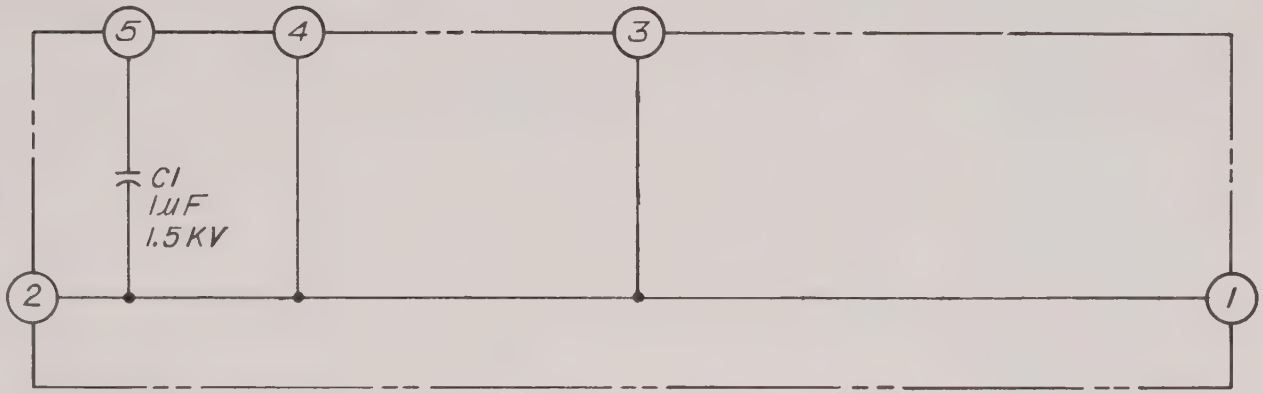

REQD PER ASSY	ITEM NO.	PART NUMBER	PART NAME	MATERIAL — SPECIFICATION	CODE IDENT	FINISH	REF DES.	ZONE

1. FOR P.C. BOARD ASSY.
SEE DWG. NO. 8300-714

NOTES: (UNLESS OTHERWISE SPECIFIED)

DIM IN INCHES
TOLERANCES
.XXX = .010
.XX = .03
X° = 30'

BREAK ALL SHARP CORNERS & EDGES
MACH SURFACES ✓

DWG SIZE B

EXCEPT AS OTHERWISE PROVIDED BY CONTRACT, THESE DRAWINGS AND SPECIFICATIONS ARE THE PROPERTY OF CALICO AND SHALL NOT BE REPRODUCED OR COPIED OR USED AS THE BASIS FOR THE MANUFACTURE OR SALE OF APPARATUS WITHOUT WRITTEN PERMISSION.

DASH NO.	QTY REQD	NEXT ASSEMBLY	EFF ON	AUTH

TITLE
SCHEMATIC-ATTENUATOR "B"
(A14)

MODEL 8300

RELEASE	E. Trust	1/14/9			
CHECKER	J. Wiener	1/14/9	PURCHASING		
DESIGN			PROJ ENGR	Guy Throp	1-19-69
DRFTSMN	J. Kelle	12/10/68	CHF ENGR		

CALICO
CALIFORNIA INSTRUMENTS CORP.
SAN DIEGO, CALIFORNIA

CONTRACT NO.

CODE IDENT 16067

DWG NO. B8300-084 REV A

SCALE NONE SHEET 1 OF 1

CALICO F-101

REPLACEABLE PARTS

7.1 GENERAL

This section contains ordering information and complete list of replaceable parts. (Applicable part lists to the appendix section are contained therein, not in this section.) Parts are listed by major assembly in alphanumeric order of their reference designators. Description, manufacturers' part number, manufacturers' code ident number (see Appendix A for list of manufacturers), and CALICO's stock number are indicated.

7.2 ORDERING INFORMATION

In order to provide our customers with prompt service on replacement parts, please provide the following information, when applicable, for each part ordered.

a) Model number and serial number of the instrument

b) CALICO part number of the sub-assembly where component is located

c) Component reference designator

d) Component description

e) Component manufacturer number and code ident

f) CALICO stock number

All replacement parts orders should be placed with CALIFORNIA INSTRUMENTS CORPORATION, San Diego, California.

CALICO	CALIFORNIA INSTRUMENTS CORP. SAN DIEGO, CALIFORNIA	CODE IDENT 16067	PARTS LIST

REF. DES.	MFG. NUMBER	DESCRIPTION	CODE IDENT	CALICO STOCK NUMBER	ITEM NO.
	8300-400-1	DIGITAL MULTIMETER	16067		1
	8300-403	MODEL 8300 KIT	16067	1-42067	2
A1	8300-702-1	MOTHER BOARD	16067		3
A2	8300-700-1	DECADE + ANALOG BD.	16067		4
A3	NOT USED				5
A4	8300-708-1	OHMS CONV.	16067		6
A5	8300-706-1	CURRENT BD.	16067		7
A6	8300-709-1	AC CONV.	16067		8
A7	8300-704-1	ATTENUATOR "A"	16067		9
A8	8300-705-1	FILTER BD.	16067		10
A9	8300-707-1	FREQUENCY BD.	16067		11
A10	8300-703-1	PRE-AMP BOARD	16067		12
A11	8300-713-1	POWER SUPPLY #3	16067		13
A12	8300-712-1	POWER SUPPLY #2	16067		14
A13	8300-711-1	POWER SUPPLY #1	16067		15
A14	8300-714-1	ATTENUATOR "B"	16067		16
A15	8300-710-1	PRINT BOARD	16067		17
	8300-401-1	BENCH MT. KIT	16067		18
C1	CK-103	CAPACITOR .01 μf	71590	6-10094	19
C2	CK-103	CAPACITOR .01 μf	71590	6-10094	20
F1	313.200	FUSE .2A S.B.	75915	2-40310	21
	8300-402-1	RACK MT. KIT	16067		22
J1	NOT USED				23
J2	NOT USED				24
J3	AC3	RECEPTACLE-PWR. CORD	82389	4-10111	25
J4	28JR106-1	BNC CONNECTOR	24931	4-10091	26
J5	60GA4F	RECEPTACLE	82389	4-10108	27
					28
L1	6302	CHOKE 2.5 Mh	76493	5-90001	29
L2	6302	CHOKE 2.5 Mh	76493	5-90001	30
					31
R1	NOT USED				32
R2	4330	RESISTOR 1Ω 3 1/4W	91637	5-50002	33
R3	RC07GF184J	RESISTOR 180K 1/4W 5%	JEDEC	5-10106	34
S1	46203L	SWITCH SLIDE	82389	2-40299	35
S2	46206LF	POWER MODE SW.	82389	2-40298	36

MODEL	8300	CALICO P/N	8300-400	ASSY R.O.
TITLE	DIGITAL MULTIMETER	SHT 3	OF 5	

CALICO CALIFORNIA INSTRUMENTS CORP. SAN DIEGO, CALIFORNIA | CODE IDENT 16067 | PARTS LIST

REF. DES.	MFG. NUMBER	DESCRIPTION	CODE IDENT	CALICO STOCK NUMBER	ITEM NO.
S3	54-61681-26A1H	POWER SWITCH	87034	2-40126	37
S4	46203L	SWITCH SLIDE	82389	2-40299	38
XF1	342012	FUSE HOLDER	75915	2-40261	39
	8300-232-1	JUMPER PIN ASSY	16067	1-42068	40
	8300-715-7	GUARD SHIELD COVER	16067	1-55049	41
	8300-716-7	GUARD SHIELD RIGHT SIDE	16067	1-55050	42
	8300-717-7	GUARD SHIELD LEFT SIDE	16067	1-55051	43
	8300-718-7	GUARD SHIELD COVER	16067	1-55052	44
	8300-719-7	GUARD SHIELD TRANS.	16067	1-55053	45
	8300-720-7	GUARD SHIELD TRANS.	16067	1-55054	46
	8300-202-1	SIDE PANEL	16067	1-42030	47
	8300-202-2	SIDE PANEL	16067	1-42031	48
	8300-230-7	BUTTON-SWITCH, MODIFIED	16067	1-42029	49
	8300-203-7	FRONT SUB-PANEL	16067	1-42036	50
	8300-205-7	REAR PANEL	16067	1-42035	51
	8300-206-7	TOP COVER	16067	1-42033	52
	8300-206-8	BOTTOM COVER	16067	1-42034	53
	8300-208-7	SHIELD TRANS.	16067	1-42037	54
	8300-215-7	BUTCH PLATE	16067	1-42040	55
	8300-223-7	SWITCH KEEPER	16067	1-42041	56
	8300-231-7	POLARIZER	16067	1-42065	57
	6-32 3/4 LG.	SCREW, PAN HEAD			58
	6-32 3/4 LG.	SCREW, FLAT HEAD			59
	#6	WASHER INT. STAR			60
	6-32	NUT			61
	4-40 1/4 LG.	SCREW, PAN HEAD			62
	4-40 1/4 LG.	SCREW, FLAT HEAD			63
	#4	WASHER INT. STAR			64
	4-40	NUT			65
	N440 - 1/4	NYLON SCREW, PAN HD.	75987		66
	N440 - 5/16	NYLON SCREW, FLAT HEAD	75987		67
	2161	NYLON WASHER	83330		68
	N440-X	NYLON NUT	75987		69
					70
	129515	ANGLE BRACKET	73734		71
	1416-4	TERMINAL LUG	83330		72

MODEL 8300 | CALICO P/N 8300-400 | ASSY R.O.

TITLE DIGITAL MULTIMETER | SHT 4 OF 5

CALICO CALIFORNIA INSTRUMENTS CORP. SAN DIEGO, CALIFORNIA

CODE IDENT 16067

PARTS LIST

REF. DES.	MFG. NUMBER	DESCRIPTION	CODE IDENT	CALICO STOCK NUMBER	ITEM NO.
					73
	J52306	PUSH BUTTON	71590	2-40292	74
	#24 AWG	BUSS WIRE			75
		TEFLON SLEEVING FOR #24 WIRE			76
	608	HOLE PLUG	83330		77
					78
	97348	FINGER STRIP 3/8 WIDE	30817		79
	(MUST BE PURCHASED IN 10 FT. LG. APPROX. 333 PCS.)				

MODEL 8300	CALICO P/N 8300-400	ASSY R.O.
TITLE DIGITAL MULTIMETER	SHT 5 OF 5	

CALICO CALIFORNIA INSTRUMENTS CORP. SAN DIEGO, CALIFORNIA

CODE IDENT 16067

PARTS LIST

REF. DES.	MFG. NUMBER	DESCRIPTION	CODE IDENT	CALICO STOCK NUMBER	ITEM NO.
	8300-403	MODEL 8300 KIT, Accessory	16067		1
	FOLLOWING ITEMS TO BE BAGGED AND SHIPPED WITH UNIT				2
					3
	17258	POWER CORD	70903	2-41094	4
	8300-800-1	INPUT CABLE	16067	1-42066	5
	313.100	FUSE .1A S.B.	75915	2-40316	6
					7
	2525	ALIGNMENT TOOL	00194	2-41098	8
					9
	MODEL 8300	INSTRUCTION MANUAL	16067		10

MODEL 8300 | CALICO P/N 8300-403 | ASSY R.O.

TITLE MODEL 8300 KIT | SHT 2 OF 2

CALICO CALIFORNIA INSTRUMENTS CORP. SAN DIEGO, CALIFORNIA | CODE IDENT 16067 | PARTS LIST

REF. DES.	MFG. NUMBER	DESCRIPTION	CODE IDENT	CALICO STOCK NUMBER	ITEM NO.
A1	8300-702	MOTHER BOARD	16067		1
	-7	P.C. BOARD	16067	1-55036	2
					3
					4
A1R1	6023P-1-503	POT 50K	02335	5-70074	5
A1R2	NOT USED				6
A1R3	NOT USED				7
A1R4	6023P-1-502	POT 5K	02335	5-70073	8
A1R5	T.B.D.	RESISTOR RN60C 1%			9
A1R6	3300A-014-46	RESISTOR 400K .1%	16067	5-80103	10
					11
A1S1	NOT USED				12
A1S2	NOT USED				13
A1S3	NOT USED				14
A1S4	NOT USED				15
A1S5	8300-012	SWITCH--PUSH BUTTON	16067	2-40275	16
A1S6	8300-012	SWITCH--PUSH BUTTON	16067	2-40275	17
A1T1	8300-010	TRANSFORMER	16067	7-10106	18
					19
	97438	FINGERSTRIP 3/8" WIDE	30817		20
	(MUST BE PURCHASED IN 10 FT. LG. = APPROX. 333 PCS)				
	352	HINGED STAND OFF	91833	2-40313	21
	9725-A-0440	STAND OFF 5/16 LG. X 4-40	06540	2-40311	22
	8083-A-0440	STAND OFF 5/8 LG. X 4-40	06540	2-40312	23
					24
	.200FS1.12A15	FLEX STRIP	15912	2-41096	25
	62-5201-02-23	ELCO PIN	91662	2-40300	26
	62-5201-40-12	BD. GUIDE, RIGHT	91662	2-40302	27
	62-5201-40-22	BD. GUIDE, LEFT	91662	2-40303	28
					29
	2073	RUBBER BUMPER	76348		30
					31
					32
	7/16O.D. X 5/32I.D.	MICA WASHER .003 THICK	23050		33
					34
					35

MODEL 8300	CALICO P/N 8300-702	ASSY R.O.
TITLE MOTHER BOARD ASSY	SHT 5 OF 6	A1

CALICO CALIFORNIA INSTRUMENTS CORP. SAN DIEGO, CALIFORNIA

CODE IDENT 16067

PARTS LIST

REF. DES.	MFG. NUMBER	DESCRIPTION	CODE IDENT	CALICO STOCK NUMBER	ITEM NO.
	4-40 1/2 LG.	SCREW, PAN HEAD			36
	4-40 1/4 LG.	SCREW, PAN HEAD			37
	#4	WASHER, INT. STAR			38
	6-32 5/16 LG.	SCREW PAN HEAD			39
	#6	WASHER INT. STAR			40
	8300-207-7	M.B. STIFFENER	16067	1-42039	41
	8300-221-7	SHIELD	16067	1-42038	42

MODEL 8300 CALICO P/N 8300-702 ASSY R.O. A1

TITLE MOTHER BOARD ASSY SHT 6 OF 6

CALICO CALIFORNIA INSTRUMENTS CORP. SAN DIEGO, CALIFORNIA | CODE IDENT 16067 | PARTS LIST

REF. DES.	MFG. NUMBER	DESCRIPTION	CODE IDENT	CALICO STOCK NUMBER	ITEM NO.
A2	8300-700	ANALOG + DECADE BOARD	16067	16067	1
	-7	P.C. BOARD	16067	1-55035	2
					3
					4
A2C1	CIC-101	CAPACITOR .05μf	16067	6-10491	5
A2C2	CK-502	CAPACITOR .005μf	71590	6-10078	6
A2C3	DD201	CAPACITOR 200pf	71590	6-10461	7
A2C4	TE-1207	CAPACITOR 25μf 25V	04062	6-10355	8
A2C5	TE-1116	CAPACITOR 15μf 10V	56289	6-10462	9
A2C6	CM05C050K03	CAPACITOR 5pf	04062	6-10483	10
A2C7	5C023105X0250B3	CAPACITOR 1μf	56289	6-10440	11
A2C8	CK-102	CAPACITOR .001μf	71590	6-10459	12
A2C9	CK-503	CAPACITOR .05μf	71590	6-10460	13
A2C10	TE-1207	CAPACITOR 25μf 25V	04062	6-10355	14
A2C11	DM-15-471F	CAPACITOR 470 pf	04062	6-10519	15
A2CR1	CIC-704	DIODE ZENER	16067	3-10142	16
A2CR2	IN914	DIODE	JEDEC	3-10118	17
A2CR3	IN5227	DIODE ZENER	04713	3-10136	18
A2CR4	IN914	DIODE	JEDEC	3-10118	19
A2CR5	IN914	DIODE	JEDEC	3-10118	20
A2CR6	IN914	DIODE	JEDEC	3-10118	21
A2CR7	IN914	DIODE	JEDEC	3-10118	22
A2CR8	IN914	DIODE	JEDEC	3-10118	23
A2CR9	IN914	DIODE	JEDEC	3-10118	24
					25
A2DS1	B5750	NIXIE TUBE	83594	2-30031	26
A2DS2	B5750	NIXIE TUBE	83594	2-30031	27
A2DS3	B5750	NIXIE TUBE	83594	2-30031	28
A2DS4	B5750	NIXIE TUBE	83594	2-30031	29
A2DS5	B5750	NIXIE TUBE	83594	2-30031	30
A2DS6	B5856	NIXIE TUBE POL.	83594	2-30036	31
					32
A2IC1	CIC-200-4	I. C.	16067	3-30007	33
A2IC2	811CE	I. C.	0000B	3-30128	34
A2IC3	811CE	I. C.	0000B	3-30128	35
A2IC4	MC789P	I. C.	04713	3-30112	36

MODEL 8300 | CALICO P.N 8300-700 | ASSY R.O. A2

TITLE ANALOG + DECADE BOARD ASSY | SHT 4 OF 7

CALICO CALIFORNIA INSTRUMENTS CORP. SAN DIEGO, CALIFORNIA | CODE IDENT 16067 | PARTS LIST

REF. DES.	MFG. NUMBER	DESCRIPTION	CODE IDENT	CALICO STOCK NUMBER	ITEM NO.
A2IC5	MC724P	I. C.	04713	3-30111	37
A2IC6	MC724P	I. C.	04713	3-30111	38
A2IC7	MC724P	I. C.	04713	3-30111	39
A2IC8	U6B996079X	I. C.	07263	3-30116	40
A2IC9	U6A995979X	I. C.	07263	3-30115	41
A2IC10	U5B995879X	I. C.	07263	3-30114	42
A2IC11	U5B995879X	I. C.	07263	3-30114	43
A2IC12	U6B996079X	I. C.	07263	3-30116	44
A2IC13	U6A995979X	I. C.	07263	3-30115	45
A2IC14	U5B995879X	I. C.	07263	3-30114	46
A2IC15	U6B996079X	I. C.	07263	3-30116	47
A2IC16	U6A995979X	I. C.	07263	3-30115	48
A2IC17	U5B995879X	I. C.	07263	3-30114	49
A2IC18	U6B996079X	I. C.	07263	3-30116	50
A2IC19	U6A995979X	I. C.	07263	3-30115	51
A2IC20	U5B995879X	I. C.	07263	3-30114	52
A2IC21	MC790P	I. C.	04713	3-30113	53
A2IC22	MC789P	I. C.	04713	3-30112	54
					55
A2Q1	2N3638	TRANSISTOR	07263	3-30094	56
A2Q2	CIC 336	TRANSISTOR	16067	3-30015	57
A2Q3	TIS43	UNIJUNCTION	16067	3-30131	58
A2Q4	2N3440	TRANSISTOR	07263	3-30090	59
A2Q5	2N3440	TRANSISTOR	07263	3-30090	60
A2Q6	2N3440	TRANSISTOR	07263	3-30090	61
A2Q7	2N3440	TRANSISTOR	07263	3-30090	62
					63
A2R1	T. B. D.	RESISTOR 3300A-014 .05%	16067		64
A2R2	3257W-1-502	POT 5K	80294	5-70081	65
A2R3	RC07GF101J	RESISTOR 100Ω 1/4W 5%	JEDEC	5-10029	66
A2R4	RC07GF153J	RESISTOR 15K 1/4W 5%	JEDEC	5-10080	67
A2R5	3300A-014-42	RESISTOR 599.7K .05%	16067	5-80072	68
A2R6	T. B. D.	RESISTOR RN60D 1%			69
A2R7	RC07GF102J	RESISTOR 1K 1/4W 5%	JEDEC	5-10053	70
A2R8	RC07GF106J	RESISTOR 10M 1/4W 5%	JEDEC	5-10135	71
A2R9	RC07GF106J	RESISTOR 10M 1/4W 5%	JEDEC	5-10135	72

MODEL 8300 | CALICO P/N 8300-700 | ASSY R.O. A2

TITLE ANALOG + DECADE BOARD ASSY | SHT 5 OF 7

CALICO CALIFORNIA INSTRUMENTS CORP. SAN DIEGO, CALIFORNIA | CODE IDENT 16067 | PARTS LIST

REF. DES.	MFG. NUMBER	DESCRIPTION	CODE IDENT	CALICO STOCK NUMBER	ITEM NO.
A2R10	RC07GF275J	RESISTOR 2.7M 1/4W 5%	JEDEC	5-10127	73
A2R11	3257W-1-103	POT 10K	80294	5-70087	74
A2R12	RC07GF152J	RESISTOR 1.5K 1/4W 5%	JEDEC	5-10057	75
A2R13	RC07GF272J	RESISTOR 2.7K 1/4W 5%	JEDEC	5-10062	76
A2R14	RC07GF101J	RESISTOR 100Ω 1/4W 5%	JEDEC	5-10029	77
A2R15	RC07GF103J	RESISTOR 10K 1/4W 5%	JEDEC	5-10076	78
A2R16	RC07GF103J	RESISTOR 10K 1/4W 5%	JEDEC	5-10076	79
A2R17	RC07GF103J	RESISTOR 10K 1/4W 5%	JEDEC	5-10076	80
A2R18	T.B.D.	RESISTOR RC07GF	JEDEC		81
A2R19	RC07GF103J	RESISTOR 10K 1/4W 5%	JEDEC	5-10076	82
A2R20	RC07GF154J	RESISTOR 150K 1/4W 5%	JEDEC	5-10104	83
A2R21	RC07GF102J	RESISTOR 1K 1/4W 5%	JEDEC	5-10053	84
A2R22	RC07GF102J	RESISTOR 1K 1/4W 5%	JEDEC	5-10053	85
A2R23	3257W-1-103	POT 10K	80294	5-70087	86
A2R24	RC07GF102J	RESISTOR 1K 1/4W 5%	JEDEC	5-10053	87
A2R25	RC07GF102J	RESISTOR 1K 1/4W 5%	JEDEC	5-10053	88
A2R26	RC07GF102J	RESISTOR 1K 1/4W 5%	JEDEC	5-10053	89
A2R27	T.B.D.	RESISTOR RC07GF	JEDEC		90
A2R28	T.B.D.	RESISTOR RC07GF	JEDEC		91
A2R29	RC07GF223J	RESISTOR 22K 1/4W 5%	JEDEC	5-10084	92
A2R30	RC07GF223J	RESISTOR 22K 1/4W 5%	JEDEC	5-10084	93
A2R31	RC07GF223J	RESISTOR 22K 1/4W 5%	JEDEC	5-10084	94
A2R32	RC07GF223J	RESISTOR 22K 1/4W 5%	JEDEC	5-10084	95
A2R33	RC07GF202J	RESISTOR 2K 1/4W 5%	JEDEC	5-10059	96
A2R34	RC07GF202J	RESISTOR 2K 1/4W 5%	JEDEC	5-10059	97
A2R35	RC07GF202J	RESISTOR 2K 1/4W 5%	JEDEC	5-10059	98
A2R36	RC07GF202J	RESISTOR 2K 1/4W 5%	JEDEC	5-10059	99
A2R37	RC07GF223J	RESISTOR 22K 1/4W 5%	JEDEC	5-10084	100
A2R38	RC07GF202J	RESISTOR 2K 1/4W 5%	JEDEC	5-10059	101
A2R39	RC07GF202J	RESISTOR 2K 1/4W 5%	JEDEC	5-10059	102
A2R40	RC07GF223J	RESISTOR 22K 1/4W 5%	JEDEC	5-10084	103
A2R41	T.B.D.	RESISTOR RN60D			104
A2R42	RC07GF100J	RESISTOR 10Ω 1/4W 5%	JEDEC	5-10005	105
A2Y1	CR-18A/L	CRYSTAL 2MHz	13454	3-30124	106
	02-037-701-9-200-009	ELCO PIN	91662	2-40304	107
	62-5204-41-12	ELCO GUIDE PIN	91662	2-40301	108

MODEL 8300 | CALICO P/N 8300-700 | ASSY R.O. A2

TITLE ANALOG + DECADE BOARD ASSY | SHT 6 OF 7

CALICO CALIFORNIA INSTRUMENTS CORP. SAN DIEGO, CALIFORNIA

CODE IDENT 16067

PARTS LIST

REF. DES.	MFG. NUMBER	DESCRIPTION	CODE IDENT	CALICO STOCK NUMBER	ITEM NO.
	24 AWG	BUSS WIRE			109
		TEFLON SLEEVING FOR #24	WIRE		110
					111
	RCTO5075-7A	TRANS. PAD		2-40296	112

MODEL 8300

CALICO P/N 8300-700

ASSY R.O. A2

TITLE ANALOG + DECADE BOARD ASSY

SHT 7 OF 7

CALICO CALIFORNIA INSTRUMENTS CORP. SAN DIEGO, CALIFORNIA | CODE IDENT 16067 | **PARTS LIST**

REF. DES.	MFG. NUMBER	DESCRIPTION	CODE IDENT	CALICO STOCK NUMBER	ITEM NO.
A7	8300-704	ATTENUATOR "A"	16067		1
	-7	P.C. BOARD	16067	1-55038	2
					3
	SEE SHEET 3	EYELET			4
					5
					6
A7C1	DM-15-471F	CAPACITOR 470 pf 1%	04062	6-10519	7
A7C2	DM-15-471F	CAPACITOR 470 pf 1%	04062	6-10519	8
A7C3	DM-15-471F	CAPACITOR 470 pf 1%	04062	6-10519	9
A7C4	DM-15-471F	CAPACITOR 470 pf 1%	04062	6-10519	10
A7C5	DM-15-471F	CAPACITOR 470 pf 1%	04062	6-10519	11
A7C6	DM-15-471F	CAPACITOR 470 pf 1%	04062	6-10519	12
A7C7	ZD5A333F	CAPACITOR .033μf 1%	12406	6-10518	13
A7C8	VC58G	VARIABLE CAPACITOR 1-12 pf	73899	6-10458	14
A7C9	T.B.D.	CAPACITOR CM05	04062		15
A7C10	CM05F621K03	CAPACITOR 620 pf 10%	04062	6-10294	16
A7C11	T.B.D.	CAPACITOR CM04	04062		17
A7C12	VC56C	VARIABLE CAPACITOR 5-50 pf	73899	6-10463	18
A7C13	T.B.D.	CAPACITOR CM05	04062		19
A7C14	DM-19-622K	CAPACITOR 6200 pf 10%	04062	6-10539	20
A7C15	T.B.D.	CAPACITOR CM04	04062		21
A7C16	T.B.D.	CAPACITOR CM04	04062		22
					23
					24
					25
A7R1	CIC 502	RESISTOR 1.5M	16067	5-80088	26
	MATCHED SET (R1	THRU R7, R9 and R12)			27
A7R2	SEE A7R1	RESISTOR 1.5M			28
A7R3	SEE A7R1	RESISTOR 1.5M			29
A7R4	SEE A7R1	RESISTOR 1.5M			30
A7R5	SEE A7R1	RESISTOR 1.5M			31
A7R6	SEE A7R1	RESISTOR 1.5M			32
A7R7	SEE A7R1	RESISTOR 1.5M			33
A7R8	2387-5K	POT 5K	91637	5-70083	34
A7R9	SEE A7R1	RESISTOR 1.5M			35
A7R10	T.B.D.	RESISTOR RC07GF	JEDEC		36

MODEL 8300 | CALICO P/N 8300-704 | ASSY R.O. A7

TITLE ATTENUATOR "A" BOARD ASSEMBLY | SHT 4 OF 5

CALICO CALIFORNIA INSTRUMENTS CORP. SAN DIEGO, CALIFORNIA | CODE IDENT 16067 | PARTS LIST

REF. DES.	MFG. NUMBER	DESCRIPTION	CODE IDENT	CALICO STOCK NUMBER	ITEM NO.
A7R11	2387-500Ω	POT 500Ω	91637	5-70090	37
A7R12	SEE A7R1	RESISTOR 100K			38
A7R13	T.B.D.	RESISTOR RC07GF	JEDEC		39
A7R14	T.B.D.	RESISTOR RC07GF	JEDEC		40
					41
					42
					43
	8300-220-1	SHIELD	16067	1-42045	44
	8300-220-2	SHIELD	16067	1-42046	45
					46
					47
	60-5001-19-13	ELCO PIN	91662	2-40290	48
					49
	#22 AWG	BUSS WIRE			50
					51
					52
	4-40 X 3/4" LG.	SCREW, PAN HEAD			53
	#4	WASHER, INT. STAR			54
	4-40 X 3/16" LG.	SCREW, PAN HEAD NYLON			55
	#4	WASHER, FLAT NYLON			56
	4-40	NUT, NYLON			57

MODEL 8300 | CALICO P/N 8300-704 | ASSY R.O. A7

TITLE ATTENUATOR "A" BOARD ASSEMBLY | SHT 5 OF 5

CALICO	CALIFORNIA INSTRUMENTS CORP. SAN DIEGO, CALIFORNIA	CODE IDENT 16067	PARTS LIST

REF. DES.	MFG. NUMBER	DESCRIPTION	CODE IDENT	CALICO STOCK NUMBER	ITEM NO.
A8	8300-705	FILTER BD.	16067		1
	-7	P.C. BD.	16067	1-55039	2
	SEE SHT. 3	EYELET			3
					4
A8C1	ZD5A104	CAPACITOR .1μf .5%	12406	6-10466	5
A8C2	ZD5A104	CAPACITOR .1μf .5%	12406	6-10466	6
A8C3	ZD5A104	CAPACITOR .1μf .5%	12406	6-10466	7
A8C4	CK 102	CAPACITOR .001μf	71590	6-10459	8
					9
A8CR1	FD300	DIODE	02335	3-10007	10
A8CR2	FD300	DIODE	02335	3-10007	11
					12
A8Q1	CIC 360	TRANSISTOR	16067	3-30129	13
A8Q2	2N3638	TRANSISTOR	07263	3-30094	14
A8Q3	2N3566	TRANSISTOR	07263	3-30091	15
					16
A8R1	RC07GF473J	RESISTOR 47K 1/4W 5%	JEDEC	5-10092	17
A8R2	3300A-014-45	RESISTOR 45.92K .1%	16067	5-80089	18
A8R3	3300A-014-45	RESISTOR 45.92K .1%	16067	5-80089	19
A8R4	RC07GF473J	RESISTOR 47K 1/4W 5%	JEDEC	5-10092	20
A8R5	2387-200Ω	POT 200Ω	91637	5-70092	21
A8R6	RN60D3741F	RESISTOR 3.74K 1%	JEDEC	5-60044	22
A8R7	T.B.D.	RESISTOR RC07GF	JEDEC		23
A8R8	RC07GF683J	RESISTOR 68K 1/4W 5%	JEDEC	5-10096	24
A8R9	RC07GF102J	RESISTOR 1K 1/4W 5%	JEDEC	5-10053	25
A8R10	RC07GF391J	RESISTOR 390Ω 1/4W 5%	JEDEC	5-10043	26
A8R11	RC07GF103J	RESISTOR 10K 1/4W 5%	JEDEC	5-10076	27
A8R12	RC07GF472J	RESISTOR 4.7K 1/4W 5%	JEDEC	5-10068	28
	4-40 1/4 LG.	SCREW, PAN HD.			29
A8TP1	430-108	TEST POINT BRN.	83330	2-41089	30
A8TP2	430-103	TEST POINT BLK.	83330	2-41088	31
A8TP3	430-102	TEST POINT RED	83330	2-41085	32
	#4	WASHER, INT. STAR			33
	60-5001-19-13	ELCO PIN	91662	2-40290	34
	4-40	HEX NUT			35
	8300-219-7	SHIELD	16067	1-42044	36

MODEL	8300	CALICO P/N	8300-705	ASSY R.O.
TITLE	FILTER BD. ASSY	SHT 4 OF 4		A8

CALICO CALIFORNIA INSTRUMENTS CORP. SAN DIEGO, CALIFORNIA | CODE IDENT 16067 | PARTS LIST

REF. DES.	MFG. NUMBER	DESCRIPTION	CODE IDENT	CALICO STOCK NUMBER	ITEM NO.
A10	8300-703	PRE-AMP BOARD	16067		1
	-7	P.C. BOARD	16067	1-55037	2
	SEE SHT. 3	STAND OFF			3
A10C1	192P-47392	CAPACITOR .047 µf	56289	6-10465	4
A10C2	AJAX TYPE PPW	CAPACITOR .0022 µf	AJAX	6-10238	5
A10C3	CMO5F221J03	CAPACITOR 220 pf	04062	6-10036	6
A10C4	DM-15-471F	CAPACITOR 470 pf	04062	6-10519	7
A10C5	CMO5E750J03	CAPACITOR 75 pf	04062	6-10020	8
A10C6	TE 1155	CAPACITOR 10/15V	56289	6-10335	9
A10C7	DM10-020	CAPACITOR 2 pf	04062	6-10001	10
A10C8	TE 1155	CAPACITOR 10/15V	56289	6-10335	11
A10C9	TE 1155	CAPACITOR 10/15V	56289	6-10335	12
A10C10	TE 1155	CAPACITOR 10/15V	56289	6-10335	13
A10C11	CK 103	CAPACITOR .01 µf	71590	6-10094	14
A10C12	IDP-1-333	CAPACITOR .033 µf 5%	04062	6-10512	15
A10C13	CMO5F201J03	CAPACITOR 200 pf	04062	6-10282	16
A10C14	CK502	CAPACITOR .005 µf	71590	6-10078	17
A10C15	CK502	CAPACITOR .005 µf	71590	6-10078	18
A10C16	5C023105X0250B3	CAPACITOR 1/25V	56289	6-10440	19
A10C17	CMO5F201J03	CAPACITOR 200 pf	04062	6-10282	20
A10C18	TE 1209	CAPACITOR 50/25V	56289	6-10368	21
A10C19	TE 1209	CAPACITOR 50/25V	56289	6-10368	22
A10C20	IDP-1-203	CAPACITOR .02 µf	04062	6-10100	23
A10C21	VX5A273J	CAPACITOR .027µf 50V 5%	12406	6-10511	24
A10C22	CK 103	CAPACITOR .01µf	71590	6-10094	25
A10C23	CK502	CAPACITOR .005 µf	71590	6-10078	26
A10CR1	IN 5231A	DIODE ZENER	04713	3-10143	27
A10CR2	IN 5234A	DIODE ZENER	04713	3-10130	28
A10CR3	IN 914	DIODE	JEDEC	3-10118	29
A10CR4	IN 914	DIODE	JEDEC	3-10118	30
A10CR5	IN 914	DIODE	JEDEC	3-10118	31
A10CR6	IN 914	DIODE	JEDEC	3-10118	32
A10CR7	IN 914	DIODE	JEDEC	3-10118	33
A10CR8	IN 5234A	DIODE ZENER	04713	3-10130	34
A10CR9	IN 5234A	DIODE ZENER	04713	3-10130	35
A10CR10	IN 5234A	DIODE ZENER	04713	3-10130	36

MODEL 8300 | CALICO P/N 8300-703 | ASSY R.O. A10

TITLE PRE-AMP BOARD, ASSY | SHT 4 OF 6

CALICO CALIFORNIA INSTRUMENTS CORP. SAN DIEGO, CALIFORNIA | CODE IDENT 16067 | PARTS LIST

REF. DES.	MFG. NUMBER	DESCRIPTION	CODE IDENT	CALICO STOCK NUMBER	ITEM NO.
A10IC1	CIC-200-1	INTEGRATED CKT.	16067	3-30134	37
A10IC2	CIC-200-1	INTEGRATED CKT.	16067	3-30134	38
A10IC3	CIC-200-2	INTEGRATED CKT.	16067	3-30006	39
					40
A10L1	1537-90	CHOKE 200 μh	76493	5-90005	41
A10L2	1537-90	CHOKE 200 μh	76493	5-90005	42
					43
A10Q1	CIC-360	TRANSISTOR	16067	3-30129	44
A10Q2	2N4351	MOS F.E.T.	04713	3-30127	45
A10Q3	2N3566	TRANSISTOR	07263	3-30091	46
A10Q4	NOT BEING USED	TRANSISTOR			47
A10Q5	2N3566	TRANSISTOR	07263	3-30091	48
A10Q6	2N1304	TRANSISTOR	01295	3-30117	49
					50
A10R1	RC07GF104J	RESISTOR 100K 1/4W 5%	JEDEC	5-10100	51
A10R2	RC07GF105J	RESISTOR 1M 1/4W 5%	JEDEC	5-10123	52
A10R3	RC07GF103J	RESISTOR 10K 1/4W 5%	JEDEC	5-10076	53
A10R4	RC07GF153J	RESISTOR 15K 1/4W 5%	JEDEC	5-10080	54
A10R5	RC07GF821J	RESISTOR 820Ω 1/4W 5%	JEDEC	5-10051	55
A10R6	RC07GF226J	RESISTOR 22M 1/4W 5%	JEDEC	5-10139	56
A10R7	RC07GF102J	RESISTOR 1K 1/4W 5%	JEDEC	5-10053	57
A10R8	RC07GF152J	RESISTOR 1.5K 1/4W 5%	JEDEC	5-10057	58
A10R9	RC07GF102J	RESISTOR 1K 1/4W 5%	JEDEC	5-10053	59
A10R10	RC07GF103J	RESISTOR 10K 1/4W 5%	JEDEC	5-10076	60
A10R11	RC07GF101J	RESISTOR 100Ω 1/4W 5%	JEDEC	5-10029	61
A10R12	RC07GF105J	RESISTOR 1M 1/4W 5%	JEDEC	5-10123	62
A10R13	RC07GF152J	RESISTOR 1.5K 1/4W 5%	JEDEC	5-10057	63
A10R14	RC07GF153J	RESISTOR 15K 1/4W 5%	JEDEC	5-10080	64
A10R15	RC07GF103J	RESISTOR 10K 1/4W 5%	JEDEC	5-10076	65
A10R16	RC07GF101J	RESISTOR 100Ω 1/4W 5%	JEDEC	5-10029	66
A10R17	RC07GF104J	RESISTOR 100K 1/4W 5%	JEDEC	5-10100	67
A10R18	3300A-014-5	RESISTOR 2K .01%	16067	5-80012	68
A10R19	RC07GF103J	RESISTOR 10K 1/4W 5%	JEDEC	5-10076	69
A10R20	RC07GF103J	RESISTOR 10K 1/4W 5%	JEDEC	5-10076	70
A10R21	RC07GF152J	RESISTOR 1.5K 1/4W 5%	JEDEC	5-10057	71
A10R22	RN60D4221F	RESISTOR 4.22K 1%	JEDEC	5-60048	72

MODEL 8300 | CALICO P/N 8300-703 | ASSY R.O. A10

TITLE PRE-AMP BD. ASSY | SHT 5 OF 6

CALICO CALIFORNIA INSTRUMENTS CORP. SAN DIEGO, CALIFORNIA | CODE IDENT 16067 | PARTS LIST

REF. DES.	MFG. NUMBER	DESCRIPTION	CODE IDENT	CALICO STOCK NUMBER	ITEM NO.
A10R23	RC07GF334J	RESISTOR 330K 1/4W 5%	JEDEC	5-10112	73
A10R24	RC07GF152J	RESISTOR 1.5K 1/4W 5%	JEDEC	5-10057	74
A10R25	RC07GF226J	RESISTOR 22M 1/4W 5%	JEDEC	5-10139	75
A10R26	RN60D1002F	RESISTOR 10K 1%	JEDEC	5-60079	76
A10R27	RN60D2001F	RESISTOR 2K 1%	JEDEC	5-60029	77
A10R28	RN60D1002F	RESISTOR 10K 1%	JEDEC	5-60079	78
A10R29	RC07GF125J	RESISTOR 1.2M 1/4W 5%	JEDEC	5-10142	79
A10R30	3300A-014-43	RESISTOR 17.975 .01%	16067	5-80073	80
A10R31	3300A-014-44	RESISTOR 197.75 .01%	16067	5-80074	81
A10R32	6023P-1-500	POT 50Ω	07263	5-70075	82
A10R33	6023P-1-501	POT 500Ω	07263	5-70072	83
A10R34	RC07GF100J	RESISTOR 10Ω 1/4W 5%	JEDEC	5-10005	84
A10TP1	430-103	TEST POINT--BLK.	83330	2-41088	85
A10TP2	430-108	TEST POINT--BRN.	83330	2-41089	86
A10TP3	430-102	TEST POINT--RED	83330	2-41085	87
A10TP4	430-106	TEST POINT--ORN.	83330	2-41086	88
A10TP5	430-107	TEST POINT--YEL.	83330	2-41087	89
A10TP6	430-104	TEST POINT--GRN.	83330	2-41090	90
					91
	60-5001-19-13	ELCO PIN	91662	2-40290	92
	8300-214-1	SHIELD	16067	1-42043	93
	8300-216-7	CAN	16067	1-42042	94
	RCTO5075-7A	TRANS. PAD		2-40296	95
					96
	6-32 3/8 LG.	SCREW, NYLON PAN HEAD			97
	4-40 3/16 LG.	SCREW, PAN HEAD			98
	#4	WASHER, INT. STAR			99
					100
	4-40 3/16" LG.	SCREW, NYLON PAN HEAD			101
	4-40	NUT, NYLON			102
	#4	WASHER, NYLON			103

MODEL 8300 | CALICO P/N 8300-703 | ASSY R.O. A10

TITLE PRE-AMP BD. ASSY | SHT 6 OF 6

CALICO CALIFORNIA INSTRUMENTS CORP. SAN DIEGO, CALIFORNIA

CODE IDENT 16067

PARTS LIST

REF. DES.	MFG. NUMBER	DESCRIPTION	CODE IDENT	CALICO STOCK NUMBER	ITEM NO.
A11	8300-713	POWER SUPPLY #13	16067		1
	-7	P.C. BOARD	16067	1-55047	2
					3
					4
A11C1	DD-201	CAPACITOR 200 pf	71590	6-10461	5
A11C2	DD-201	CAPACITOR 200 pf	71590	6-10461	6
A11C3	CK-502	CAPACITOR .005	71590	6-10078	7
A11C4	CK-502	CAPACITOR .005	71590	6-10078	8
A11C5	CK-103	CAPACITOR .01	71590	6-10094	9
A11C6	CK-103	CAPACITOR .01	71590	6-10094	10
A11C7	TE-1209	CAPACITOR 50μf/25V	56289	6-10368	11
A11C8	TE-1209	CAPACITOR 50μf/25V	56289	6-10368	12
					13
A11CR1	IN5227	DIODE ZENER	04713	3-10136	14
A11CR2	IN5227	DIODE ZENER	04713	3-10136	15
A11CR3	IN914	DIODE	JEDEC	3-10118	16
A11CR4	IN914	DIODE	JEDEC	3-10118	17
A11CR5	IN914	DIODE	JEDEC	3-10118	18
A11CR6	IN914	DIODE	JEDEC	3-10118	19
A11CR7	IN5234A	DIODE ZENER	04713	3-10130	20
A11CR8	IN5234A	DIODE ZENER	04713	3-10130	21
A11CR9	IN5234A	DIODE ZENER	04713	3-10130	22
A11CR10	IN5234A	DIODE ZENER	04713	3-10130	23
A11CR11	IN914	DIODE	JEDEC	3-10118	24
A11CR12	IN914	DIODE	JEDEC	3-10118	25
A11CR13	IN914	DIODE	JEDEC	3-10118	26
A11CR14	IN914	DIODE	JEDEC	3-10118	27
					28
A11IC1	CIC-200-1	I.C.	16067	3-30134	29
A11IC2	CIC-200-1	I.C.	16067	3-30134	30
					31
A11Q1	2N3638	TRANSISTOR	07263	3-30094	32
A11Q2	2N3566	TRANSISTOR	07263	3-30091	33
A11Q3	2N2102	TRANSISTOR	95303	3-30075	34
A11Q4	2N4036	TRANSISTOR	95303	3-30106	35
					36

MODEL 8300 CALICO P/N 8300-713 ASSY R.O. A11

TITLE POWER SUPPLY #3 BD. ASSY SHT 4 OF 5

CALICO CALIFORNIA INSTRUMENTS CORP. SAN DIEGO, CALIFORNIA | CODE IDENT 16067 | PARTS LIST

REF. DES.	MFG. NUMBER	DESCRIPTION	CODE IDENT	CALICO STOCK NUMBER	ITEM NO.
A11R1	RC07GF751J	RESISTOR 750Ω 1/4W 5%	JEDEC	5-10050	37
A11R2	RC07GF751J	RESISTOR 750Ω 1/4W 5%	JEDEC	5-10050	38
A11R3	RC07GF103J	RESISTOR 10K 1/4W 5%	JEDEC	5-10076	39
A11R4	RC07GF103J	RESISTOR 10K 1/4W 5%	JEDEC	5-10076	40
A11R5	RC07GF152J	RESISTOR 1.5K 1/4W 5%	JEDEC	5-10057	41
A11R6	RC07GF152J	RESISTOR 1.5K 1/4W 5%	JEDEC	5-10057	42
A11R7	RC07GF221J	RESISTOR 220Ω 1/4W 5%	JEDEC	5-10037	43
A11R8	RC07GF221J	RESISTOR 220Ω 1/4W 5%	JEDEC	5-10037	44
A11R9	RC07GF 47.1J	RESISTOR 4.7Ω 1/4W 5%	JEDEC	5-10002	45
A11R10	RC07GF100J	RESISTOR 10Ω 1/4W 5%	JEDEC	5-10005	46
A11R11	RC07GF302J	RESISTOR 3K 1/4W 5%	JEDEC	5-10063	47
A11R12	RC07GF123J	RESISTOR 12K 1/4W 5%	JEDEC	5-10078	48
A11R13	RC07GF123J	RESISTOR 12K 1/4W 5%	JEDEC	5-10078	49
A11R14	RC07GF302J	RESISTOR 3K 1/4W 5%	JEDEC	5-10063	50
					51
					52
	60-5001-19-13	ELCO PIN	91662	2-40290	53
	RCTO5075-7A			2-40297	54
					55
	TXBF-032-025B	HEATSINK	98978	2-41048	56

MODEL 8300 | CALICO P.N 8300-713 | ASSY R.O. A11

TITLE POWER SUPPLY #3 BD. ASSY | SHT 5 OF 5

CALICO CALIFORNIA INSTRUMENTS CORP. SAN DIEGO, CALIFORNIA | CODE IDENT 16067 | PARTS LIST

REF. DES.	MFG. NUMBER	DESCRIPTION	CODE IDENT	CALICO STOCK NUMBER	ITEM NO.
A12	8300-712	POWER SUPPLY #2	16067		1
	-7	P.C. BOARD	16067	1-55046	2
	SEE SHT. 3	STAND OFF			3
					4
A12C1	BR-2000-15	CAPACITOR 2000μf 15V	14655	6-10403	5
A12C2	BR-2000-15	CAPACITOR 2000μf 15V	14655	6-10403	6
A12C3	DD-201	CAPACITOR 200 pf	71590	6-10461	7
A12C4	CK-502	CAPACITOR .005μf	71590	6-10078	8
					9
					10
A12CR1	SCE-1	DIODE	14099	3-10082	11
A12CR2	SCE-1	DIODE	14099	3-10082	12
A12CR3	SCE-1	DIODE	14099	3-10082	13
A12CR4	SCE-1	DIODE	14099	3-10082	14
A12CR5	IN914	DIODE	JEDEC	3-10118	15
A12CR6	IN914	DIODE	JEDEC	3-10118	16
A12CR7	IN914	DIODE	JEDEC	3-10118	17
					18
					19
A12IC1	CIC-200-1	I.C.	16067	3-30134	20
					21
					22
A12Q1	2N2102	TRANSISTOR	95303	3-30075	23
A12Q2	2N3767	TRANSISTOR	04713	3-30103	24
					25
					26
A12R1	RC07GF102J	RESISTOR 1K 1/4W 5%	JEDEC	5-10053	27
A12R2	RC07GF152J	RESISTOR 1.5K 1/4W 5%	JEDEC	5-10057	28
A12R3	RN60D1502F	RESISTOR 15K 1%	JEDEC	5-60193	29
A12R4	4030	RESISTOR 1Ω 1 1/2W	44655	5-50106	30
A12R5	RN60D3651F	RESISTOR 3.65K 1%	JEDEC	5-60191	31
					32
	4-40 1/4 LG.	SCREW			33
	60-5001-19-13	ELCO PIN	91662	2-40290	34
	#4	WASHER INT. STAR			35
	#4	WASHER, FLAT			36

MODEL 8300 | CALICO P/N 8300-712 | ASSY R.O. A12

TITLE POWER SUPPLY #2 BD. ASSY | SHT 4 OF 4

CALICO CALIFORNIA INSTRUMENTS CORP. SAN DIEGO, CALIFORNIA

CODE IDENT 16067

PARTS LIST

REF. DES.	MFG. NUMBER	DESCRIPTION	CODE IDENT	CALICO STOCK NUMBER	ITEM NO.
A13	8300-711	POWER SUPPLY #1	16067		1
	-7	P.C. BOARD	16067	1-55045	2
					3
					4
A13C1	TC 58A	CAPACITOR 40μf/250V	76055	6-10179	5
A13C2	BR250-50	CAPACITOR 250μf/50V	14655	6-10395	6
A13C3	BR250-50	CAPACITOR 250μf/50V	14655	6-10395	7
A13C4	TE-1305	CAPACITOR 20μf/50V	56289	6-10348	8
					9
					10
A13CR1	SCE-6	DIODE	14099	3-10078	11
A13CR2	SCE-6	DIODE	14099	3-10078	12
A13CR3	SCE-6	DIODE	14099	3-10078	13
A13CR4	SCE-6	DIODE	14099	3-10078	14
A13CR5	SCE-2	DIODE	14099	3-10079	15
A13CR6	SCE-2	DIODE	14099	3-10079	16
A13CR7	SCE-2	DIODE	14099	3-10079	17
A13CR8	SCE-2	DIODE	14099	3-10079	18
A13CR9	SCE-2	DIODE	14099	3-10079	19
A13CR10	SCE-2	DIODE	14099	3-10079	20
A13CR11	SCE-2	DIODE	14099	3-10079	21
A13CR12	SCE-2	DIODE	14099	3-10079	22
					23
					24
A13R1	RC20GF104J	RESISTOR 100K 1/2W	JEDEC	5-20077	25
					26
					27
	60-5001-19-13	ELCO PIN	91662	2-40290	28

MODEL 8300 | CALICO P/N 8300-711 | ASSY R.O.

TITLE POWER SUPPLY #1 BD. ASSY | SHT 4 OF 4 | A13

CALICO CALIFORNIA INSTRUMENTS CORP. SAN DIEGO, CALIFORNIA

CODE IDENT 16067

PARTS LIST

REF. DES.	MFG. NUMBER	DESCRIPTION	CODE IDENT	CALICO STOCK NUMBER	ITEM NO.
A14	8300-714	ATTENUATOR "B"	16067		1
	-7	P.C. BOARD	16067	1-55048	2
					3
					4
A14C1	ZD 4458	CAPACITOR 1μf 1.5KV	12406	6-10157	5
					6
					7
	#22 AWG.	BUSS WIRE			8
					9
	60-5001-19-13	ELCO PIN	91662	2-40290	10
					11
	2829-115-3	MOUSE TAIL	98159		12

MODEL 8300 | CALICO P/N 8300-714 | ASSY R.O. A14

TITLE ATTENUATOR "B" BOARD ASSY | SHT 4 OF 4

APPENDIX A

The following code numbers are from the Federal Supply Code for Manufacturers Cataloging Handbook H4-1 and its latest supplement. Alphabetical codes have been arbitrarily assigned to supplier not appearing in the H4 handbook.

0000A	ElectriCord	Westfield, Pennsylvania
0000B	Tech. Prod. Sales	
00141	Pic Eng.	New York, New York
00544	Metal Cal	Inglewood, California
00656	Aero Vox	New Bedford, Massachusetts
00779	AMP, Inc.	Harrisburg, Pennsylvania
00853	Sangamo	Marion, Illinois
01121	Allen Bradley	Milwaukee, Wisconsin
01255	Litton Industries	Beverly Hills, California
01281	TRW Semiconductors, Inc.	Lawndale, California
01295	Texas Instruments	Dallas, Texas
02335	Fairchild	Hicksville, LI, NewYork
02660	Amphenol	Broadview, Illinois
03507	General Electric	Syracuse, New York
03508	General Electric	Syracuse, New York
03516	General Electric	Somersworth, New Hampshire
03797	Eldema	El Monte, California
03911	Clairex	New York, New York
04009	Arrow-Hart	Hartford, Connecticut
04062	Elmenco	New York, New York
04713	Motorola	Phoenix, Arizona
05276	Pomona	El Monte, California
05397	Kemet	Cleveland, Ohio
05820	Wakefield Engineering	Wakefield, Massachusetts
06184	Conelco	San Bernardino, California
06229	Electrovert, Inc.	Mt. Vernon, New York
06540	Amatom Elect. Hardware	New Rochelle, New York
07088	Kelvin Elect. Co.	Van Nuys, California
07256	Silicon Trans. Corp.	Garden City, New York
07263	Fairchild	Mt. View, California
07387	Bircher Corporation	Los Angeles, California
07556	Unitrack (Calabro Plastics)	Upper Darby, Pennsylvania
07716	IRC	Burlington, Iowa
08718	Cannon	Phoenix, Arizona
08730	Vermaline Products	Franklin Lakes, New Jersey
09026	Babcock	Costa Mesa, California
11432	Diamond Perforated Metals	Gardena, California
12405	Hysol	El Monte, California
12406	Elpac	Fullerton, California
12463	Amtronics Mfg. Inc.	Omaha, Nebraska
12697	Clarostat	Dover, New Hampshire
13454	Texas Crystals	River Grove, Illinois
14099	Semtech Corp.	Newbury Park, California
14655	Cornell-Dubilier Elect. Corp.	Newark, New Jersey
14752	Electrocube	S. Pasadena, California
15112	Electra Scientific	Fullerton, California
15801	Fenwal	Framingham, Massachusetts
15818	Amelco	Mt. View, California
15909	Daven	Livingston, New Jersey
15912	Digital Sensors, Inc.	Los Angeles, California
16067	California Instruments Corporation	San Diego, California
16758	Delco	Kokomo, Indiana
16902	Simpson	Escondido, California
17838	California General Corp. (Mektron)	Chula Vista, California
18722	RCA	Mountaintop, Pennsylvania
19080	The Robinson Company	Hawthorne, California
19781	Potter	Anaheim, California
21604	Buckeye Stamping Co.	Columbus, Ohio
22599	Elastic Stop Nut	Van Nuys, California
23936	Pamotor	San Francisco, California
24931	Specialty Conn. Co., Inc.	Indianapolis, Indiana
25684	Victoreen	Oaklawn, Illinois
26364	Component Corp.	Denville, New Jersey
26533	Zero	Burbank, California
26528	Lamcor	Anahiem, California
27556	IMB	Santa Fe Springs, California
28520	Heyman Mfg. Co. (Heyco)	Kenilworth, New Jersey
30086	ITE	Philadelphia, Pennsylvania
42190	Muter Co.	Chicago, Illinois
44655	Ohmite Mfg. Co.	Skokie, Illinois
46384	Penn. Eng.	Doylestown, Pennsylvania
56289	Sprague	North Adams, Massachusetts
58474	Superior Elect. Co.	Bristol, Connecticut
60741	Triplett	Bluffton, Ohio
70903	Belden	Chicago, Illinois
71002	Birnbach Radio	New York, New York
71279	Cambion	Cambridge, Massachusetts
71400	Bussman	St. Louis, Missouri
71450	CTS	Elkhart, Indiana
71468	ITT Cannon	Los Angeles, California
71590	Centralab	Milwaukee, Wisconsin
71785	Cinch-Jones	Chicago, Illinois
72619	Dialco	Brooklyn, New York
72982	Erie Reston Corp.	Erie, Pennsylvania
73138	Beckman	Fullerton, California
73559	Carling Electr. Inc.	W. Hartford, Connecticut
73734	Federal Screw Products	Chicago, Illinois
73899	JFD	Brooklyn, New York
73949	Guardian	Chicago, Illinois
74193	Heinemann	Trenton, New Jersey
74276	Signalite, Inc.	Neptune, New Jersey
74542	Hoyt	Penacook, New Hampshire
74545	Hubbel	Bridgeport, Connecticut
74970	E.F. Johnson	Waseca, Minnesota
75382	Kulka	Mt. Vernon, New York
75915	Littelfuse	Des Plaines, Illinois
75987	Weckesser Co.	Chicago, Illinois
76055	Mallory	Frankfort, Indiana
76348	Miller Products Co. Inc.	New York, New York
76493	J.W. Miller	Los Angeles, California
76854	Oak Mfg. Co.	Crystal Lake, Illinois
77342	Potter-Brumfield	Chicago, Illinois
* 78526	Stanwyck Winding Co.	Newburg, New York
78290	Struthers-Dunn	Pitman, New Jersey
78488	Stackpole	St. Mary's, Pennsylvania
78553	Tinnerman Products	Cleveland, Ohio
78947	Ucinite Co.	Newtonville, Massachusetts
79727	Continental-Wirt	Philadelphia, Pennsylvania
79963	Zierick Mfg. Corp.	New Rochelle, New York
* 00866	Goe Eng.	City of Industry, California
80112	G.C. Electronics	Los Angeles, California
80294	Bourns	Riverside, California
80368	Sylvania	New York, New York
81073	Grayhill	La Grange, Illinois
81095	Triad	Chicago, Illinois
81312	Winchester	Norwalk, Connecticut
82389	Switchcraft	Chicago, Illinois
82877	Rotron	Woostock, New York
83330	H.H. Smith	Brooklyn, New York
83594	Burroughs	Plainfield, New Jersey
83701	Elec. Devices, Inc.	Yonkers, New York
84171	Arco	Great Neck, New York
86684	RCA	Harrison, New Jersey
87034	Marco-Oak	Anaheim, California
88026	Cutler-Hammer	Los Angeles, California
88245	UseCo	Van Nuys, California
89665	UTC	Venice, California
90201	Mallory	Indianapolis, Indiana
91637	Dale	Columbus, Nebraska
91662	Elco	Willow Grove, Pennsylvania
91812	Janco Corp.	Burbank, California
91833	Keystone	New York, New York
91929	Micro Switch	Chicago, Illinois
92194	Alpha Wire	Chicago, Illinois
92219	Waldom	Chicago, Illinois
93332	Sylvania	Waburn, Massachusetts
94222	Southco	Chester, Pennsylvania
95146	Alco	Lawrence, Massachusetts
95303	RCA	Cincinnati, Ohio
96682	Genisco	Compton, California
98159	Rubber Teck Inc.	Gardena, California
98978	IERC	Burbank, California
99515	Electron Products	Pasadena, California
99517	Vasco	El Monte, California
99800	Delevan Elect. Corp.	Aurora, New York

* Out of numerical order.

ONE YEAR WARRANTY

CALIFORNIA INSTRUMENTS CORPORATION warrants each instrument manufactured by them to be free from defects in material and workmanship for a period of one year from the date of shipment to the original purchaser. Excepted from this warranty are tubes, fuses, and batteries which carry the warranty of their original manufacturer where applicable. CALIFORNIA INSTRUMENTS CORPORATION will service, replace, or adjust any defective part of parts, free of charge, when the instrument is returned to the Company freight prepaid, and when examination reveals that the fault has not occurred because of misuse or abnormal conditions of operation. Equipment repaired beyond the effective date of warranty or when abnormal usage has occurred will be charged at applicable rates. CALICO will submit an estimate for such charges before commencing repair if so requested.

PROCEDURE FOR SERVICE

If a fault develops, notify CALICO or its local representative, giving full details of the difficulty, and including the model number and serial number. On receipt of this information, service data or shipping instructions will be furnished. If shipment is indicated, forward the instrument, freight prepaid, to the factory or to the authorized repair station indicated in the instructions. If requested, an estimate of the charges will be made before the work begins, provided the instrument is not covered by the warranty.

DAMAGE IN TRANSIT

The instrument should be tested as soon as it is received. If it fails to operate properly, or is damaged in any way, a claim should be filed with the carrier. A full report of the damage should be obtained by the claim agent, and this report should be forwarded to us. CALICO will advise the disposition to be made of the equipment and arrange for repair or replacement. Please include model number and serial number when referring to the instrument.

DETAILED INSTRUCTIONS

FOR

AC CONVERTOR

OPTION "A"

SUB – ASSY A6

CALICO P/N 8300 – 709

ACCEPTANCE TEST PROCEDURE

This section of the acceptance test procedure should be performed only after completing Section 2.4 under DC volts.

Using a hp 200 CD sine wave oscillator, or equivalent, and a FLUKE 883A differential voltmeter, or equivalent, connect per Figure #1.

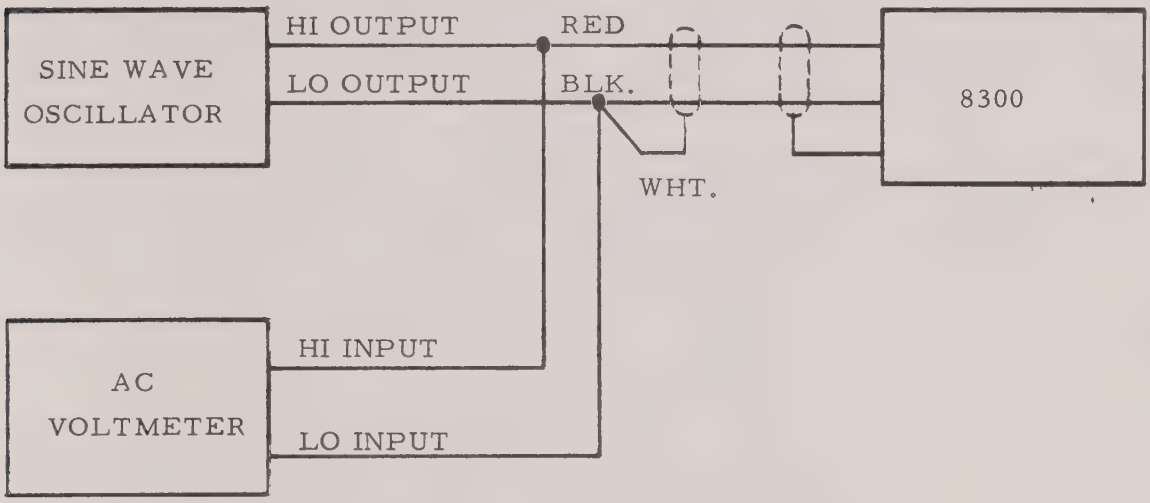

FIGURE 1.

BLOCK DIAGRAM

Select the AC function and the 10 volt range on the 8300 and the 883A voltmeter. Adjust the sine wave oscillator to around 10 volts rms and measure the output with the 883A voltmeter. The 8300 should read the same as the 883A voltmeter ±60 digits.

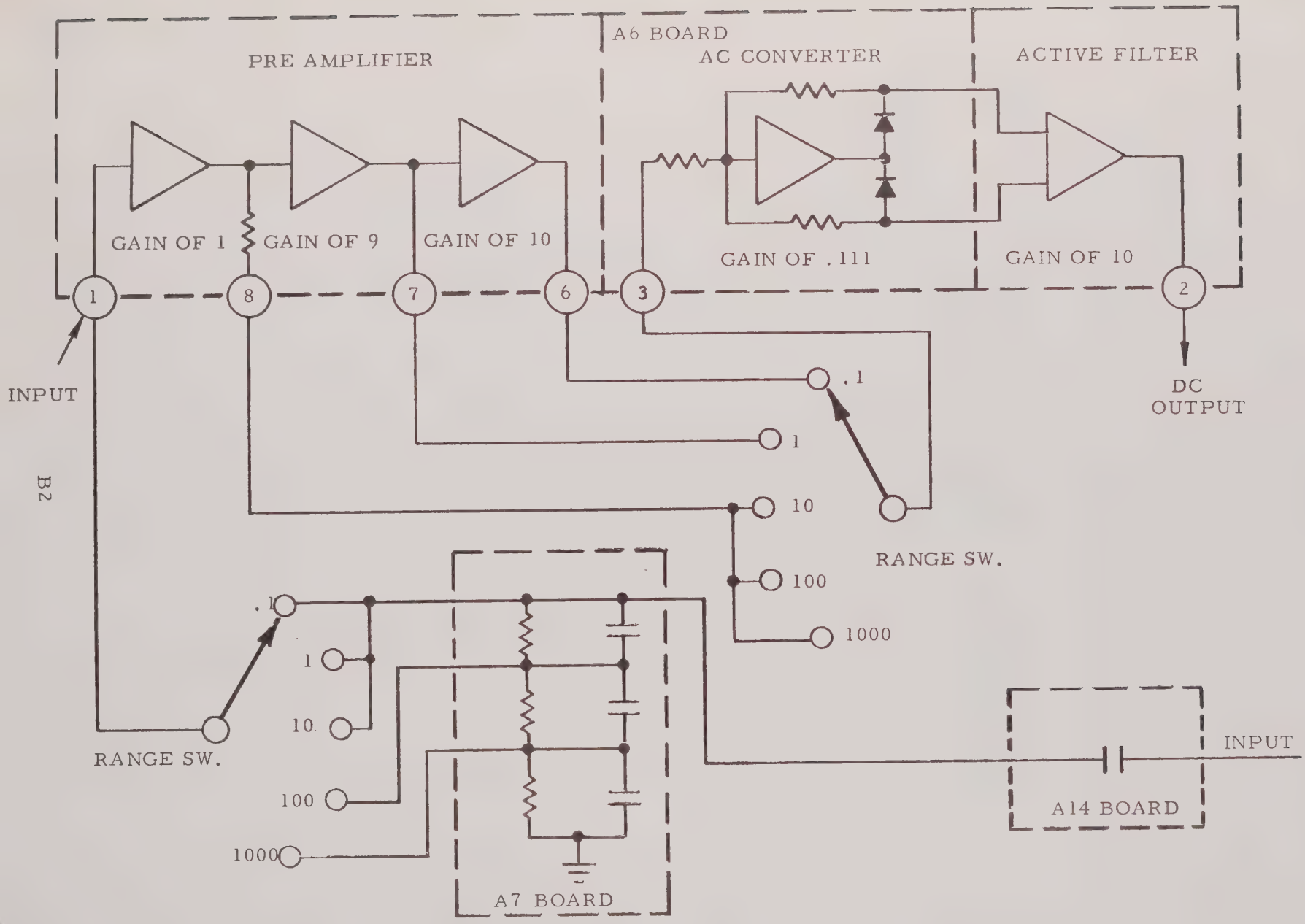

FIGURE 2.

BLOCK DIAGRAM -- A. C. CONVERTOR

THEORY OF OPERATION

GENERAL

The 8300-709 AC to DC Converter is an averaging type converter calibrated in rms for a sine wave. A block diagram which illustrates the theory of operation is shown in Figure 2. A schematic diagram is shown on drawing E8300-079.

The input signal is applied to the input preamplifier section, either directly for .1, 1 and 10 volt ranges or through an attenuator for the 100 and 1000 volt ranges. This input signal is selected at any of three outputs from the preamplifier. The proper amplitude preamplifier output is fed into the AC Converter by the range switch. A 9 volt input at the AC Converter produces a 10 volt DC output from the active filter.

Therefore, the preamplifier has gains of 0.9, 9.0 and 90.0. An input to the preamplifier of 10 volts rms produces an output of 9 volts rms which drives the AC Converter and becomes 10 volts DC out of the active filter.

DETAILED CIRCUIT DESCRIPTION

The preamplifier portion of the AC Converter is divided into three sections. The first is a gain of one, high input impedance amplifier. The input signal is applied through A6R1 to the gates of a tetrode FET A6Q1 connected as a source follower. The source bias current is provided by a tetrode FET A6Q2 connected as a constant current source through three forward biased diodes A6CR3, A6CR9 and A6CR5. Two emitter followers A6Q4 and A6Q5 are driven from the bias diodes between the FETS. This provides around 2 MA of static current in the emitter followers. The gain of one output, the junction of A6R4 and A6R5, is fed into the second preamplifier section through A6C3 and A6C27. A gain of .9 output is formed at A6 Pin 8 by A6R9 driving the input impedance of the AC Converter A6 Pin 3.

The second preamplifier section A6IC1 is an operational amplifier. The gain of 9 is formed by A6R10, A6R11 and A6R14. The output of this section A6 Pin 7 is used to drive the third preamplifier section A6IC2. This section is an operational amplifier with a gain 10. The input is formed by A6C9, A6C29 and A6R15 and the feedback is formed by A6R16 and A6R19. The output drives A6 Pin 6. The three preamplifier sections form gains of .9 at Pin 8, 9 at Pin 7 and 90 at Pin 6. These combine through the range switch to provide 9 volts full scale at the AC Converter input.

The AC Converter A6IC3 is a high gain operational amplifier with diode coupled feedback to perform the actual AC to DC Conversion. The rectifier diodes A6CR8 and A6CR9 are located within the feedback loop which reduces the effect of the diode forward drop by the open loop gain of the amplifier. Each rectifier drives the feedback during one-half cycle, thus providing full wave rectification. This differential output is applied to the input of the output filter.

The output filter is a two pole, differential butterworth type active filter. The output filter A6IC4 and associated components starts rolling off at 12 db per octive from 1 H_Z. Without the capacitive components A6C19, A6C20, A6C21, A6C22, A6C25 and A6C26 the filter is a differential operational amplifier with a gain of 10. The DC offset voltage of A6IC4 is corrected by inserting a DC voltage through A6R39. The injection voltage is developed across a potentiometer connected between the ±15 volt DC supplies. This zero control allows the filter to be adjusted for zero output when zero input is present. The DC output A6 Pin 2 is connected to the input of the DVM where it gets measured and displayed.

CALIBRATION AND TEST PROCEDURE

This procedure may be performed only after completing the calibration procedure in section 4 under DC Volts.

TEST EQUIPMENT REQUIRED

a) Optimation AC104A, AC voltage standard

b) COHU 666, thermal transfer standard

c) COHU 331, DC voltage standard

d) HP 200DC, sine wave oscillator or equivalent

e) Triplett 661, AC wattmeter/voltmeter or equivalent

f) Superior Electric 216 Variac or equivalent

CALIBRATION PROCEDURE

The following calibration procedure may be performed on a routine basis to insure that the unit remains within the specified tolerances. This procedure should always be performed after any repairs are made on the basic accuracy determining circuitry. Before calibrating the unit, apply AC power and allow a minimum of one hour to permit the internal circuitry to stabilize.

This procedure covers the following adjustments:

a) zero adjustment

b) calibration of AC Converter

c) calibration of attenuator

10 VOLT AC RANGE

Select the AC function and the 10 range. Apply the following input voltages ±.05% and the following frequencies and adjust if necessary.

INPUT VOLTAGE ±.05%	FREQUENCY	MAXIMUM ERROR	ADJUSTMENT
00.000	---	±5 Digits	A6R40
10.000	100 H_z	±50 Digits	A6R20
10.000	1000 H_z	±50 Digits	
10.000	10000 H_z	±50 Digits	A6C2
5.000	100 H_z	±28 Digits	
5.000	1000 H_z	±28 Digits	
5.000	10000 H_z	±28 Digits	

1 VOLT AC RANGE

Select the AC function and the 1 range. Apply the following input voltages, ±.05%, and the following frequencies and adjust if necessary.

INPUT VOLTAGE ±.05%	FREQUENCY	MAXIMUM ERROR	ADJUSTMENT
1.0000	100 H_z	±50 Digits	A6R14
1.0000	1000 H_z	±50 Digits	
1.0000	10000 H_z	±50 Digits	A6C28
.50000	100 H_z	±28 Digits	
.50000	1000 H_z	±28 Digits	
.50000	10000 H_z	±28 Digits	

.1 VOLT AC RANGE

Select the AC function and the .1 range. Apply the following input voltages, ±.05%, and frequencies and adjust if necessary.

INPUT VOLTAGE ±.05%	FREQUENCY	MAXIMUM ERROR	ADJUSTMENT
0.10000	100 H_z	±50 Digits	A6R19
0.10000	1000 H_z	±50 Digits	
0.10000	10000 H_z	±50 Digits	A6C30
0.050000	100 H_z	±28 Digits	
0.050000	1000 H_z	±28 Digits	
0.050000	10000 H_z	±28 Digits	
0.00000	---	±5 Digits	

100 VOLTS AC RANGE

Select the AC function and the 100 range. Apply the following input voltages, ±.05%, and the following frequencies and adjust if necessary.

INPUT VOLTAGE ±.05%	FREQUENCY	MAXIMUM ERROR	ADJUSTMENT
100.00	100 H_z	±50 Digits	
100.00	1000 H_z	±50 Digits	
100.00	10000 H_z	±50 Digits	A7C8 and/or A7C9
50.000	100 H_z	±28 Digits	
50.000	1000 H_z	±28 Digits	
50.000	10000 H_z	±28 Digits	

1000 VOLT AC RANGE

Select the AC function and the 1000 range. Apply the following input voltages, ±.05%, and the following frequencies and adjust if necessary.

INPUT VOLTAGE ±.05%	FREQUENCY	MAXIMUM ERROR	ADJUSTMENT
500.00	100 H_z	±28 Digits	
500.00	1000 H_z	±28 Digits	
500.00	10000 H_z	±28 Digits	A7C12 and/or A7C13

NOTE: The adjustments on the 100 and 1000 volt ranges interact. It, therefore, may be necessary to repeat these steps more than once.

TEST PROCEDURE

The following test procedure or any part of it may be performed if required. This test procedure may be performed only after completing the calibration procedure.

This procedure covers the following:

a) COMMON MODE REJECTION

b) INPUT IMPEDANCE

c) TEMPERATURE COEFFICIENT

d) TIME STABILITY

e) RESOLUTION

f) LINE VOLTAGE RANGE

COMMON MODE REJECTION

To perform the common mode rejection test, connect the 8300 per Figure 3.

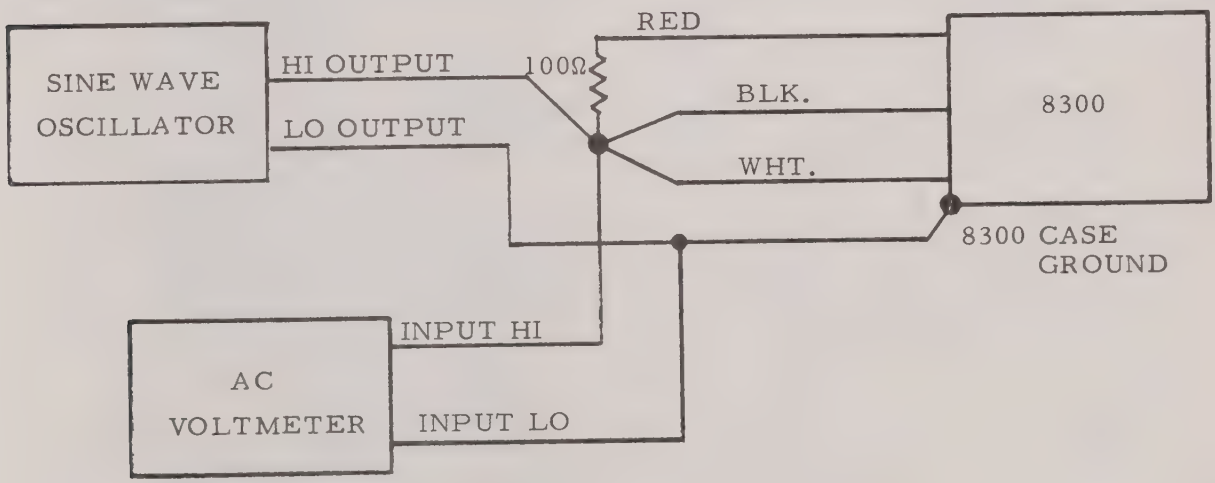

Figure 3.

Select the AC function and the .1 range on the 8300. Turn the oscillator output to zero and check for .00000 in the display ±1 digit. Set the oscillator to 60 H_Z and adjust the amplitude to 10 volts rms. The 8300 should read .00010 or less.

INPUT IMPEDANCE

Select the AC function and the 10 range on the 8300. Apply a stable sine wave voltage at 10 KH_z. Adjust the AC source until the 8300 reads 10.000. Insert a 1 KΩ resistor in the high input lead. The 8300 should read 9.950 or higher.

TEMPERATURE COEFFICIENT

Allow the machine to warm up for one hour at room temperature, 25°C, and check the full scale calibration as given in the calibration procedure. Place the unit in an environmental chamber and raise the temperature to 50°C. Allow the unit at least one hour to stabilize at 50°C. The allowable full scale excursion is ±38 digits.

TIME STABILITY

Allow the 8300 to stabilize at 25°C for two hours. Connect the input to a precision full scale AC voltage. Monitor the 8300 for 24 hours and check for a 10 digit or less change.

RESOLUTION

Select the AC function and the 10 range. Connect the 8300 to a precision AC voltage source. Apply an input of one volt rms at 1 KH_z. Vary the input by precisely 1 MV rms. The display should read this one digit change.

LINE VOLTAGE RANGE

The following line voltage tests are made around 115 volts AC 60 H_z. If the unit is to be used on 230 volts AC or other than 60 H_z the test should be run at that voltage or frequency.

Connect the variac to the 115 volt AC 60 H_z line. Connect the wattmeter/voltmeter to the output of the variac and connect the 8300 to the wattmeter/voltmeter output. Apply a full scale input voltage to the 8300. Vary the line voltage from 105 to 125 volts AC and check for less than a four digit change in the reading.

REVISIONS						
REV	AUTH	DESCRIPTION	ZONE	EFF ON	DATE	APRD

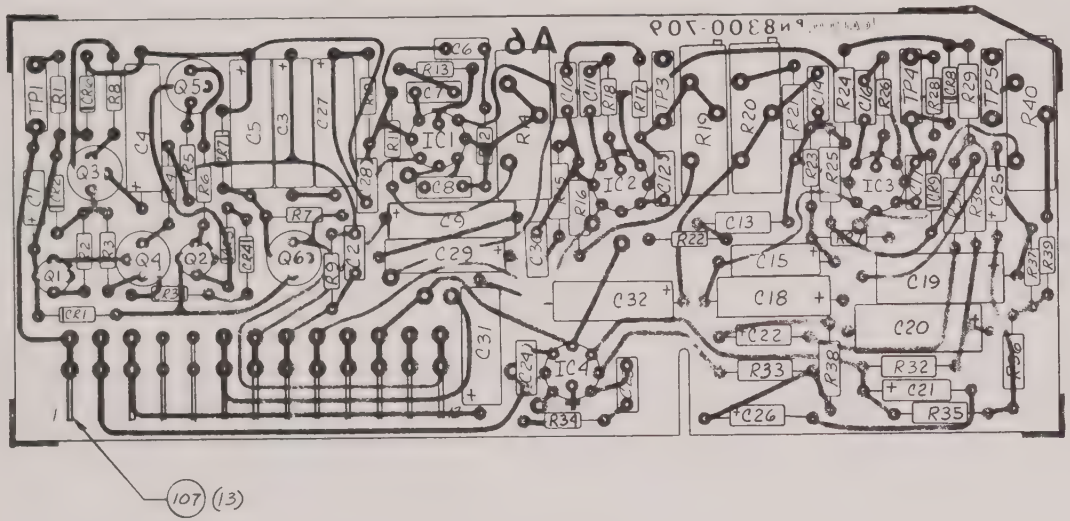

A6
-1 ASSEMBLY
VIEW COMPONENTSIDE

C8300-709 /

REQD PER ASSY	ITEM NO.	PART NUMBER	PART NAME	MATERIAL — SPECIFICATION	CODE IDENT	FINISH	REF DES.	ZONE
	/	PL8300-709	PARTS LIST	SHEET 4, 5 & 6				
-1								

DIM IN INCHES
TOLERANCES
.XXX = .010
.XX = .03
X° = 30'

BREAK ALL SHARP CORNERS & EDGES
MACH SURFACES √

DWG SIZE C

TITLE A.C. CONVERTER (A6) PC BOARD ASSEMBLY

CALICO
CALIFORNIA INSTRUMENTS CORP.
SAN DIEGO, CALIFORNIA

EXCEPT AS OTHERWISE PROVIDED BY CONTRACT, THESE DRAWINGS AND SPECIFICATIONS ARE THE PROPERTY OF CALICO AND SHALL NOT BE REPRODUCED OR COPIED OR USED AS THE BASIS FOR THE MANUFACTURE OR SALE OF APPARATUS WITHOUT WRITTEN PERMISSION.

MODEL	8300			
RELEASE	[illegible]	2/1/79		
CHECKER	Wener	2/12/79	PURCHASING	
DESIGN			PROJ ENGR	/
DRFTSMN	T BROWN	2/4/9	CHF ENGR	

CONTRACT NO.
CODE IDENT 16067
DWG NO. C8300-709
REV /
SCALE 2/1
SHEET 2 OF 5

DASH NO.	QTY REQD	NEXT ASSEMBLY	EFF ON	AUTH

2. MAX. COMPONENT HEIGHT TO BE .38
1. FOR SCHEMATIC SEE DWG NO E8300-079

NOTES (UNLESS OTHERWISE SPECIFIED)

CALICO F 102

REVISIONS						
REV	AUTH	DESCRIPTION	ZONE	EFF ON	DATE	APPD
A		GEN CLEAN UP			7/9	GT

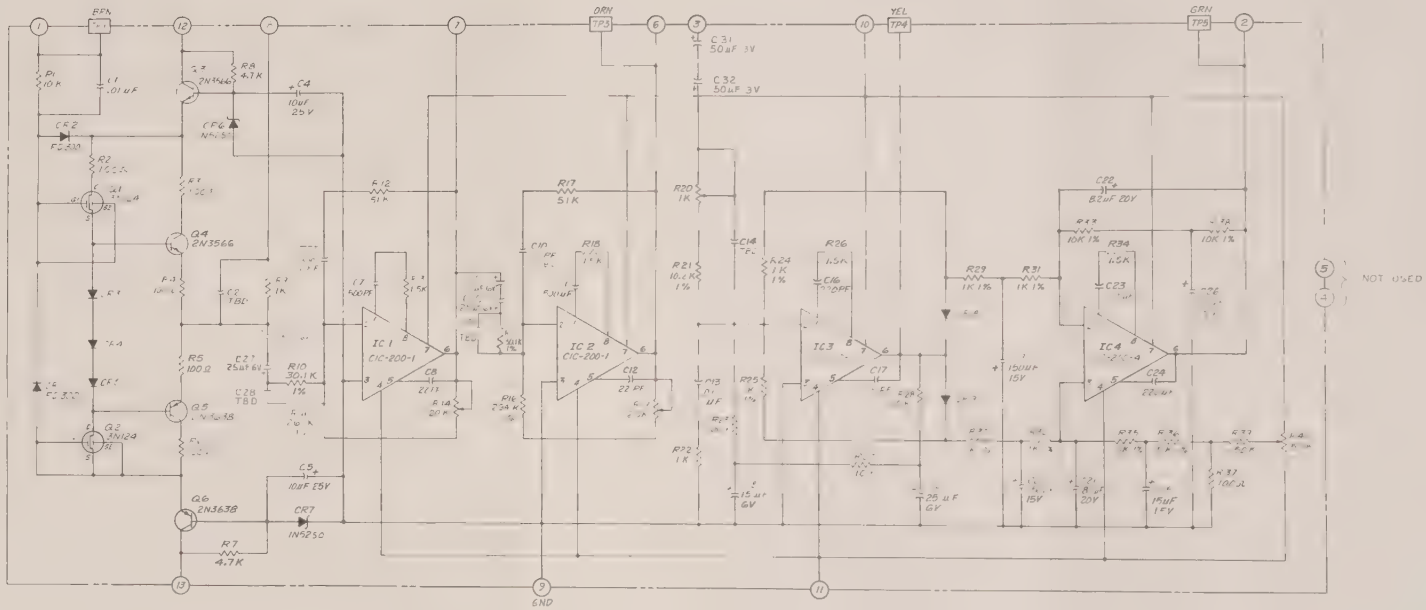

3. FOR P.C BOARD ASSY. SEE DWG NO. 8300-709.
2. ALL DIODES ARE IN914
1. ALL RESISTORS ARE 1/4W 5%.

NOT. UNLESS OTHERWISE SPECIFIED

REQD PER ASSY	PART NUMBER	CAPT NAME	MATERIAL SPECIFICATION	FINISH	REF DES ZONE

E

SCHEMATIC - AC CONVERTER

CALICO

8300-079 A

CALICO CALIFORNIA INSTRUMENTS CORP. SAN DIEGO, CALIFORNIA | CODE IDENT 16067 | PARTS LIST

REF. DES.	MFG. NUMBER	DESCRIPTION	CODE IDENT	CALICO STOCK NUMBER	ITEM NO.
A6	8300-709	AC CONV. BD.	16067		1
	-7	P.C. BOARD	16067	1-55043	2
	SEE SHEET 3	EYELET			3
					4
A6C1	192P-10392	CAPACITOR .01μf	56289	6-10471	5
A6C2	T.B.D.	CAPACITOR CMO5			6
A6C3	TE-1091	CAPACITOR 25/6V	56289	6-10351	7
A6C4	TE-1204	CAPACITOR 10/25V	56289	6-10338	8
A6C5	TE-1204	CAPACITOR 10/25V	56289	6-10338	9
A6C6	CMO5C100J03	CAPACITOR 10 pf	04062	6-10004	10
A6C7	CE 501	CAPACITOR 500 pf	71590	6-10476	11
A6C8	CMO5E220J03	CAPACITOR 22 pf	04062	6-10260	12
A6C9	TE-1091	CAPACITOR 25/6V	56289	6-10351	13
A6C10	DM10-020	CAPACITOR 2 pf	14655	6-10001	14
A6C11	CE501	CAPACITOR 500 pf	71590	6-10476	15
A6C12	CMO5E220J03	CAPACITOR 22 pf	04062	6-10260	16
A6C13	192P10392	CAPACITOR .01μf	56289	6-10471	17
A6C14	T.B.D.	CAPACITOR CMO5			18
A6C15	TE-1089	CAPACITOR 15/6V	56289	6-10513	19
A6C16	CD10ED221J03	CAPACITOR 220 pf	14655	6-10036	20
A6C17	CMO5C050K03	CAPACITOR 5pf	04062	6-10483	21
A6C18	TE-1091	CAPACITOR 25/6V	56289	6-10351	22
A6C19	150D157X0015S2	CAPACITOR 150/15V	56289	6-10381	23
A6C20	150D157X0015S2	CAPACITOR 150/15V	56289	6-10381	24
A6C21	150D825X9015B2	CAPACITOR 8.2/15V	56289	6-10472	25
A6C22	150D825X9015B2	CAPACITOR 8.2/15V	56289	6-10472	26
A6C23	CK502	CAPACITOR .005μf	71590	6-10078	27
A6C24	CD10ED221J03	CAPACITOR 220 pf	14655	6-10036	28
A6C25	150D156X0015B2	CAPACITOR 15/15V	56289	6-10474	29
A6C26	150D156X0015B2	CAPACITOR 15/15V	56289	6-10474	30
A6C27	TE-1091	CAPACITOR 25/6V	56289	6-10351	31
A6C28	T.B.D.	CAPACITOR CMO5			32
A6C29	TE-1091	CAPACITOR 25/6V	56289	6-10351	33
A6C30	T.B.D.	CAPACITOR CMO5			34
A6C31	TE-1058	CAPACITOR 50/3V	56289	6-10521	35
A6C32	TE-1058	CAPACITOR 50/3V	56289	6-10521	36

MODEL 8300 | CALICO P/N 8300-709 | ASSY R.O.

TITLE AC CONV. BD. ASSY | SHT 4 OF 6 | A6

CALICO CALIFORNIA INSTRUMENTS CORP. SAN DIEGO, CALIFORNIA

CODE IDENT 16067

PARTS LIST

REF. DES.	MFG. NUMBER	DESCRIPTION	CODE IDENT	CALICO STOCK NUMBER	ITEM NO.
A6CR1	FD300	DIODE	02335	3-10007	37
A6CR2	FD300	DIODE	02335	3-10007	38
A6CR3	IN914	DIODE	JEDEC	3-10118	39
A6CR4	IN914	DIODE	JEDEC	3-10118	40
A6CR5	IN914	DIODE	JEDEC	3-10118	41
A6CR6	IN5250	DIODE ZENER	04713	3-10134	42
A6CR7	IN5250	DIODE ZENER	04713	3-10134	43
A6CR8	IN914	DIODE	JEDEC	3-10118	44
A6CR9	IN914	DIODE	JEDEC	3-10118	45
					46
A6IC1	CIC-200-1	I. C.	16067	3-30134	47
A6IC2	CIC-200-1	I. C.	16067	3-30134	48
A6IC3	CIC-200-1	I. C.	16067	3-30134	49
A6IC4	CIC-200-4	I. C.	16067	3-30007	50
					51
A6Q1	3N124	F. E. T.	04713	3-30119	52
A6Q2	3N124	F. E. T.	04713	3-30119	53
A6Q3	2N3566	TRANSISTOR	02335	3-30091	54
A6Q4	2N3566	TRANSISTOR	02335	3-30091	55
A6Q5	2N3638	TRANSISTOR	02335	3-30094	56
A6Q6	2N3638	TRANSISTOR	02335	3-30094	57
					58
A6R1	RC07GF103J	RESISTOR 10K 1/4W 5%	JEDEC	5-10076	59
A6R2	RC07GF101J	RESISTOR 100Ω 1/4W 5%	JEDEC	5-10029	60
A6R3	RC07GF101J	RESISTOR 100Ω 1/4W 5%	JEDEC	5-10029	61
A6R4	RC07GF101J	RESISTOR 100Ω 1/4W 5%	JEDEC	5-10029	62
A6R5	RC07GF101J	RESISTOR 100Ω 1/4W 5%	JEDEC	5-10029	63
A6R6	RC07GF101J	RESISTOR 100Ω 1/4W 5%	JEDEC	5-10053	64
A6R7	RC07GF472J	RESISTOR 4.7K 1/4W 5%	JEDEC	5-10068	65
A6R8	RC07GF472J	RESISTOR 4.7K 1/4W 5%	JEDEC	5-10068	66
A6R9	RN60D1001F	RESISTOR 1K 1%	JEDEC	5-60020	67
A6R10	RN60D3012F	RESISTOR 30.1K 1%	JEDEC	5-60110	68
A6R11	RN60D2613F	RESISTOR 261K 1%	JEDEC	5-60198	69
A6R12	RC07GF513J	RESISTOR 51K 1/4W 5%	JEDEC	5-10093	70
A6R13	RC07GF152J	RESISTOR 1.5K 1/4W 5%	JEDEC	5-10057	71
A6R14	2387-20K	POT 20K	91637	5-70084	72

MODEL 8300 CALICO P/N 8300-709 ASSY R.O. A6

TITLE AC CONV. BD. ASSY SHT 5 OF 6

CALICO CALIFORNIA INSTRUMENTS CORP. SAN DIEGO, CALIFORNIA | CODE IDENT 16067 | PARTS LIST

REF. DES.	MFG. NUMBER	DESCRIPTION	CODE IDENT	CALICO STOCK NUMBER	ITEM NO.
A6R15	RN6OD3012	RESISTOR 30.1K 1%	JEDEC	5-60110	73
A6R16	RN6OD2943F	RESISTOR 294K 1%	JEDEC	5-60210	74
A6R17	RC07GF513J	RESISTOR 51K 1/4W 5%	JEDEC	5-10093	75
A6R18	RC07GF152J	RESISTOR 1.5K 1/4W 5%	JEDEC	5-10057	76
A6R19	2387-20K	POT 20K	91637	5-70084	77
A6R20	2387-1K	POT 1K	91637	5-70082	78
A6R21	RN6OD1022F	RESISTOR 10.2K 1%	JEDEC	5-60083	79
A6R22	RC07GF102J	RESISTOR 1K 1/4W 5%	JEDEC	5-10053	80
A6R23	RC07GF104J	RESISTOR 100K 1/4W 5%	JEDEC	5-10100	81
A6R24	RN6OD1001F	RESISTOR 1K 1%	JEDEC	5-60020	82
A6R25	RN6OD1001F	RESISTOR 1K 1%	JEDEC	5-60020	83
A6R26	RC07GF152J	RESISTOR 1.5K 1/4W 5%	JEDEC	5-10057	84
A6R27	RC07GF103J	RESISTOR 10K 1/4W 5%	JEDEC	5-10076	85
A6R28	RC07GF103J	RESISTOR 10K 1/4W 5%	JEDEC	5-10076	86
A6R29	RN6OD1001F	RESISTOR 1K 1%	JEDEC	5-60020	87
A6R30	RN6OD1001F	RESISTOR 1K 1%	JEDEC	5-60020	88
A6R31	RN6OD1001F	RESISTOR 1K 1%	JEDEC	5-60020	89
A6R32	RN6OD1001F	RESISTOR 1K 1%	JEDEC	5-60020	90
A6R33	RN6OD1002F	RESISTOR 10K 1%	JEDEC	5-60079	91
A6R34	RC07GF152J	RESISTOR 1.5K 1/4W 5%	JEDEC	5-10057	92
A6R35	RN6OD1002F	RESISTOR 10K 1%	JEDEC	5-60079	93
A6R36	RN6OD1002F	RESISTOR 10K 1%	JEDEC	5-60079	94
A6R37	RC07GF101J	RESISTOR 100Ω 1/4W 5%	JEDEC	5-10029	95
A6R38	RN6OD1002F	RESISTOR 10K 1%	JEDEC	5-60079	96
A6R39	RC07GF154J	RESISTOR 150K 1/4W 5%	JEDEC	5-10104	97
A6R40	2387-50K	POT 50K	91637	5-70085	98
					99
A6TP1	430-108	TEST POINT--BRN	83330	2-41089	100
A6TP2		NOT USED			101
A6TP3	430-106	TEST POINT--ORN	83330	2-41086	102
A6TP4	430-107	TEST POINT--YEL	83330	2-41087	103
A6TP5	430-104	TEST POINT--GRN	83330	2-41090	104
					105
					106
	60-5001-19-13	ELCO PIN	91662	2-40290	107

MODEL 8300 | CALICO P/N 8300-709 | ASSY R.O. A6

TITLE AC CONV. BD. ASSY | SHT 6 OF 6

DETAILED INSTRUCTIONS
FOR
OHMS CONVERTOR
OPTION "O"
SUB – ASSY A4
CALICO P/N 8300 – 708

ACCEPTANCE TEST PROCEDURE

This section of the acceptance test procedure should be performed only after completing Section 2.4 under DC Volts.

Select the KΩ function and the 10 range. Connect a .01% 10 KΩ resistor across the input leads, per Figure 1.

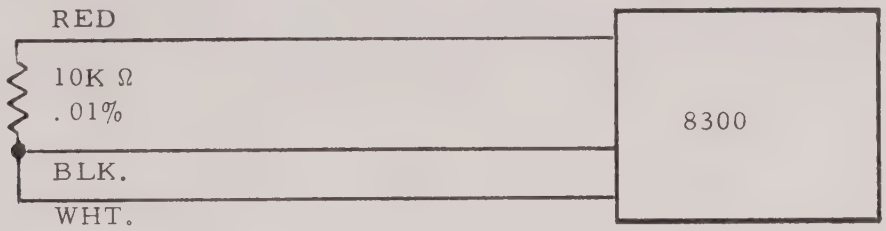

Figure 1.

The 8300 should read 10.000 ±4 digits

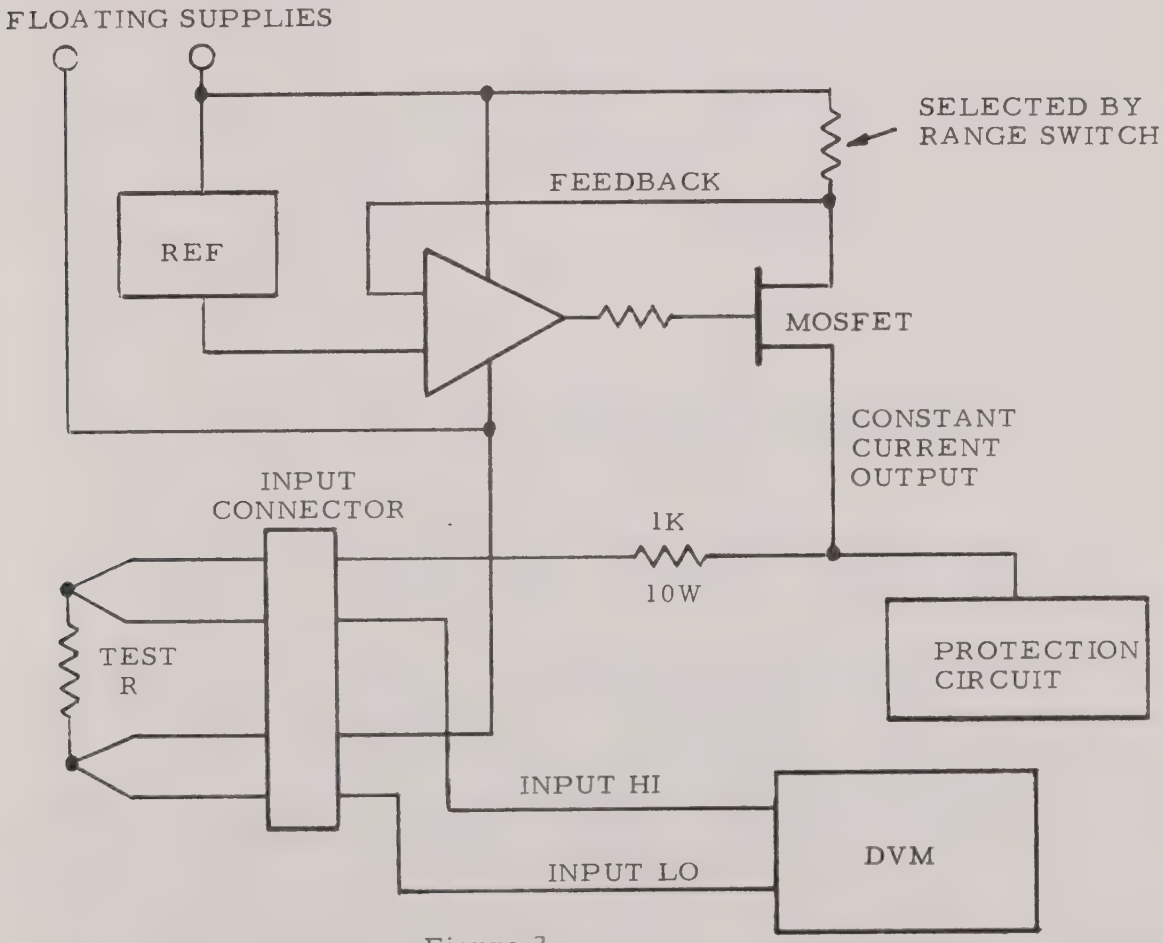

Figure 2.

OHMMETER BLOCK DIAGRAM

THEORY OF OPERATION

GENERAL

The 8300-708 ohms converter is a precision constant current source. A block daigram which illustrates the theory of operation is shown in Figure 2. A schematic diagram is shown on drawing D8300-078.

A precision current is fed out the input leads and flows through the unknown resistor. This causes a voltage drop across the unknown resistor that is proportional to the resistance. This voltage drop is measured by the DVM and displayed.

DETAILED CIRCUIT DESCRIPTION

The ohms converter is divided into three sections; the precision reference, the constant current source, and the overload protection.

The precision reference provides 6.000 volts DC. The voltage is developed from a constant current source A4Q2, A4Q3 and associated components driving a zener reference diode A4CR4. This provides from 6.1 to 6.6 volts DC. This voltage is then divided down by A4R5, A4R8, A4R6 and A4R7 to produce 6.000 volts DC at the arm of A4R6.

The precision reference voltage is applied to the non-inverting input of a high gain amplifier A4Q4 and A4IC1. The output of this amplifier A4IC1 Pin 6 is applied to the gate of MOSFET A4Q5.

The MOSFET is connected as a common source amplifier. One of three source resistors A4 Pin 7, A4 Pin 3 or A4 Pin 5 gets connected back to A4 Pin 6 through the range switch. This source resistor is connected to the same point the 6.000 volt reference uses as a common. From the source of the MOSFET, the feedback is returned to the inverting input of the amplifier. This causes the amplifier to deep 6.000 volts across the source resistor. Since only negligible gate current flows in a MOSFET, the source current must be provided by the drain. This causes the drain to provide a constant current.

Connected to the constant current output are two clamping diodes A4CR7 and A4CR8. During positive overloads A4CR7 clamps to ground. During negative overloads, A4CR8 clamps to the -22 volt power supply. In series with the constant current output is an overload current limiting resistor A4R19. During large negative overloads, the -22 volt power supply is unable to sink the overload current. When the -22 volt supply reaches -26 volts, the supply clamp amplifier A4Q1, A4CR1 and A4R1 takes over and holds the supply voltage at -26 volts.

CALIBRATION AND TEST PROCEDURE

This procedure may be performed only after completing the calibration procedure in Section 4 under DC Volts.

TEST EQUIPMENT REQUIRED

The following resistance standars shall be .01% or better accuracy:

1. 1.0000 Ω
2. 100.00 Ω
3. 1000.0 Ω
4. 10.000 KΩ
5. 100.00 KΩ
6. 1000.0 KΩ

CALIBRATION PROCEDURE

The following calibration procedure may be performed on a routine basis to insure that the unit remains within the specified tolerances. This procedure should always be performed after any repairs are made on the basic accuracy determining circuitry. Before calibrating the unit, apply AC power and allow a minimum of one hour to permit the internal circuitry to stabilize.

Select the KΩ function and the 10 range. Connect a 10 KΩ ±.01% resistor across the input leads. Adjust A4R6 until the unit reads 10.000.

Select the KΩ function and the 100 range. Connect a 100 KΩ ±.01% resistor across the input leads. Adjust A4R15 until the unit reads 100.00.

Select the KΩ function and the 1000 range. Connect a 1 MΩ ±.01% resistor across the input leads. Adjust A4R18 until the unit reads 1000.0.

NOTE

> If the following ranges do not meet the accuracy specification, return to the DC volts calibration section and repeat steps 4.2.4, 4.2.4.1 and 4.2.4.2.

Select the KΩ function and the 1 range. Connect a 1000.0 Ω ±.01% resistor across the input leads. The 8300 should read 1.0000 ±4 digits.

Select the KΩ function and the .1 range. Short the input leads together and adjust the front panel zero control if necessary. Connect the input leads to a 100.00 Ω ±.01% resistor. The 8300 should read .1000 ±4 digits.

TEST PROCEDURE

The following test procedure or any part of it may be performed if required. This test procedure may be performed only after completing the calibration procedure.

This procedure covers the following:

a) RESOLUTION

b) TEMPERATURE COEFFICIENT

c) TIME STABILITY

RESOLUTION

Select the KΩ function and the 10 range. Connect the input lead to a 100.00Ω resistor in series with a 1Ω resistor per Figure 3.

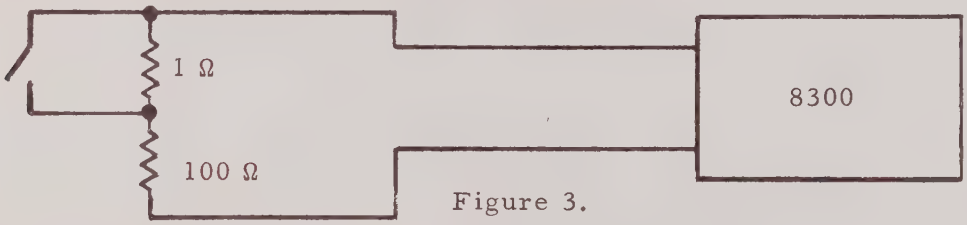

Figure 3.

Shorting the 1Ω resistor should give a one digit change in the display.

TEMPERATURE COEFFICIENT

Allow the unit to warm up a minimum of one hour at room temperature, 25°C. Connect the input lead to a 10K resistor. Select the KΩ function and the 10 range. Record the reading. Place the unit in a heat chamber. Elevate the temperature to 50°C and allow a minimum of one hour for the unit to stabilize. The reading should have changed 13 digits or less.

TIME STABILITY

Allow the unit to warm up a minimum of two hours at room temperature. Select the KΩ function and the 10 range. Connect a 10KΩ resistor across the input leads. Record the reading. Keep the temperature constant at 25°C for 24 hours and record the reading again. The reading should not vary more than 3 digits.

REVISIONS						
REV	AUTH	DESCRIPTION	ZONE	EFF ON	DATE	APRD

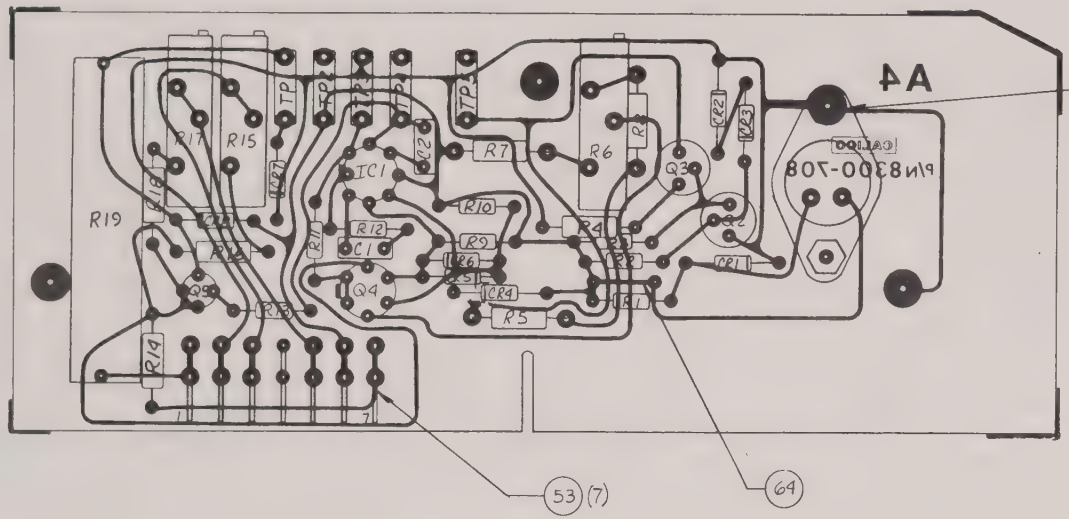

A 4
-1 ASSEMBLY
VIEW COMPONENT SIDE

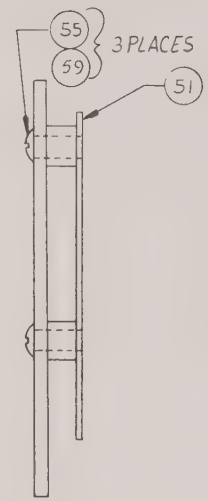

END VIEW

REQD PER ASSY	ITEM NO.	PART NUMBER	PART NAME	MATERIAL — SPECIFICATION	CODE IDENT	FINISH	REF DES.	ZONE
/		PL8300-708	PARTS LIST	SHEETS 4&5				
-1								

DIM IN INCHES
TOLERANCES
.XXX = .010
.XX = .03
X° = 30'

BREAK ALL SHARP CORNERS & EDGES
MACH SURFACES ✓

DWG SIZE C

TITLE OHM CONVERTER BD. (A4)
PC BOARD ASSEMBLY

CALICO
CALIFORNIA INSTRUMENTS CORP.
SAN DIEGO, CALIFORNIA

EXCEPT AS OTHERWISE PROVIDED BY CONTRACT, THESE DRAWINGS AND SPECIFICATIONS ARE THE PROPERTY OF CALICO AND SHALL NOT BE REPRODUCED OR COPIED OR USED AS THE BASIS FOR THE MANUFACTURE OR SALE OF APPARATUS WITHOUT WRITTEN PERMISSION.

MODEL	8300		
RELEASE	L. Shultz	2/7/69	
CHECKER	[illegible]	2/12/69	PURCHASING
DESIGN			PROJ ENGR [illegible] 2/7/69
DRFTSMN	T BROWN	1/21/69	CHF ENGR

CONTRACT NO.
CODE IDENT 16067
DWG NO. C8300-708
REV /
SCALE 2/1
SHEET 2 OF 5

DASH NO.	QTY REQD	NEXT ASSEMBLY	EFF ON	AUTH

2. MAX. COMPONENT HEIGHT TO BE .47
1. FOR SCHEMATIC SEE DWG. NO. D8300-078.

NOTES (UNLESS OTHERWISE SPECIFIED)

CAL CO F-102

C8300-708 /

REVISIONS						
REV	AUTH	DESCRIPTION	ZONE	EFF ON	DATE	APRD
A	D.C.	GEN CLEAN UP TBD			5/1/9	

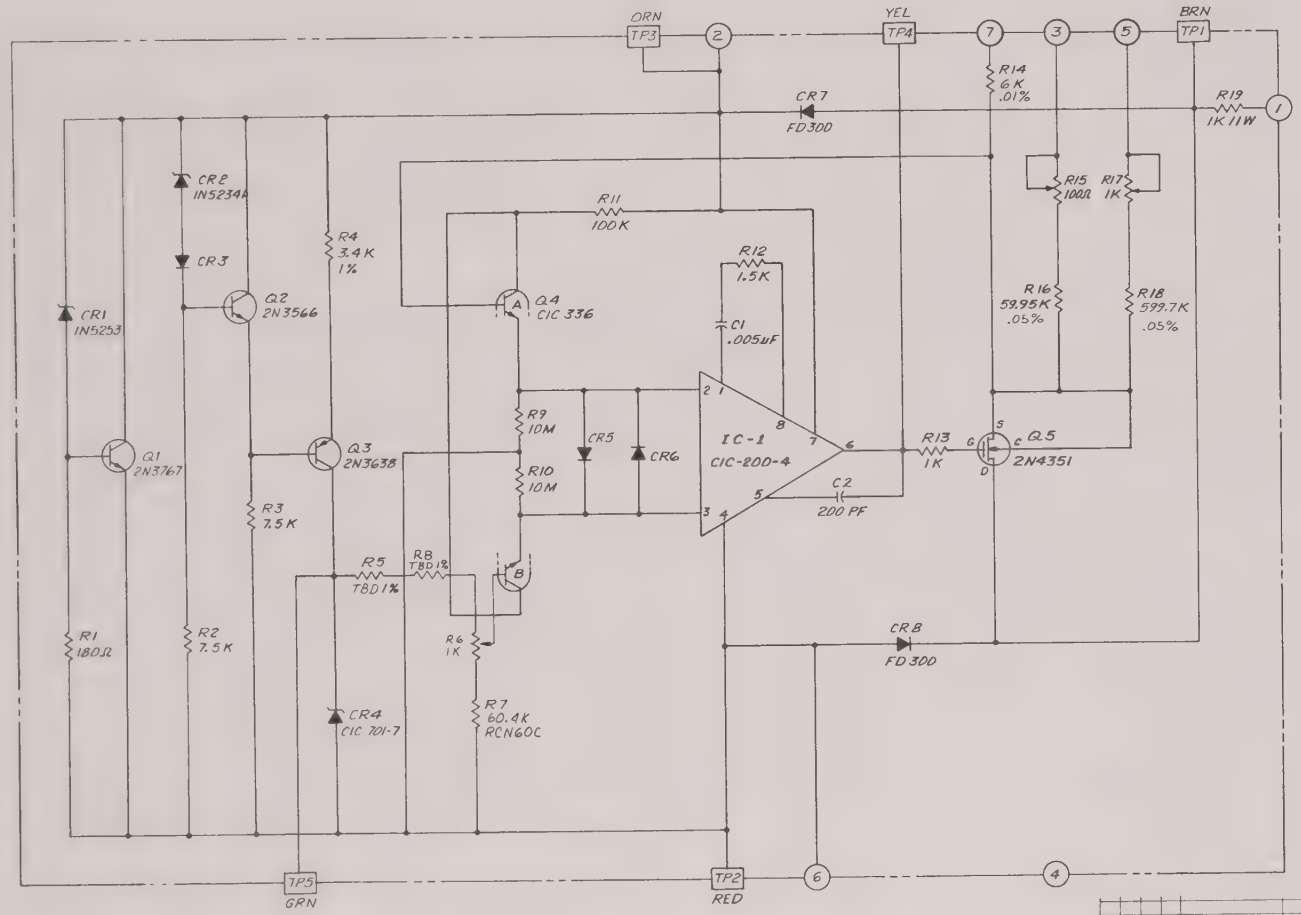

3. FOR P.C. BOARD ASSY. SEE DWG. NO. 8300-70B.

2. ALL DIODES ARE 1N914.

1. ALL RESISTORS ARE 1/4W-5%.

NOTES UNLESS OTHERWISE SPEC. ETC.

ITEM NO	PART NUMBER	PART NAME	MATERIAL — SPECIFICATION	CODE IDENT	FINISH	REF DES	ZONE
REQD PER ASSY							

DIM IN INCHES TOLERANCES XXX .010 XX .03 X° ± 30'

BREAK ALL SHARP CORNERS & EDGES MACH SURFACES ✓

DWG SIZE D

TITLE SCHEMATIC - OHMS CONVERTER (A4)

CALICO — CALIFORNIA INSTRUMENTS CORP SAN DIEGO, CALIFORNIA

EXCEPT AS OTHERWISE PROVIDED BY CONTRACT, THESE DRAWINGS AND SPECIFICATIONS ARE THE PROPERTY OF CALICO AND SHALL NOT BE REPRODUCED OR USED AS THE BASIS FOR THE MANUFACTURE OR SALE OF APPARATUS WITHOUT WRITTEN PERMISSION.

MODEL 8300

RELEASE

CHECKER

DESIGN

DRFTSMN

PURCHASING

PROJ ENGR

CHF ENGR

CONTRACT NO

CODE IDENT 16067

DWG NO. D8300-078 REV A

SCALE NONE SHEET 1 OF 1

DASH NO	QTY REQD	NEXT ASSEMBLY	EFF ON	AUTH

D8300-078

CALICO CALIFORNIA INSTRUMENTS CORP. SAN DIEGO, CALIFORNIA | CODE IDENT 16067 | PARTS LIST

REF. DES.	MFG. NUMBER	DESCRIPTION	CODE IDENT	CALICO STOCK NUMBER	ITEM NO.
A4	8300-708	OHMS CONV. BOARD	16067		1
	-7	P.C. BOARD	16067	1-55042	2
	SEE SHEET 3	EYELETS			3
					4
A4C1	CK-502	CAPACITOR .005 μf	71590	6-10078	5
A4C2	DD-201	CAPACITOR 200 pf	71590	6-10282	6
					7
A4CR1	IN5253	DIODE ZENER	04713	3-10137	8
A4CR2	IN5234A	DIODE ZENER	04713	3-10130	9
A4CR3	IN914	DIODE	JEDEC	3-10118	10
A4CR4	CIC-701-7	DIODE ZENER	16067	3-10101	11
A4CR5	IN914	DIODE	JEDEC	3-10118	12
A4CR6	IN914	DIODE	JEDEC	3-10118	13
A4CR7	FD300	DIODE	02335	3-10007	14
A4CR8	FD300	DIODE	02335	3-10007	15
					16
A4IC1	CIC200-4	I.C.	16067	3-30007	17
					18
A4Q1	2N3767	TRANSISTOR	04713	3-30103	19
A4Q2	2N3566	TRANSISTOR	07263	3-30091	20
A4Q3	2N3638	TRANSISTOR	07263	3-30094	21
A4Q4	CIC336	TRANSISTOR	16067	3-30015	22
A4Q5	2N4351	MOS F.E.T.	04713	3-30127	23
					24
A4R1	RC07GF181J	RESISTOR 180Ω 1/4W 5%	JEDEC	5-10035	25
A4R2	RC07GF752J	RESISTOR 7.5K 1/4W 5%	JEDEC	5-10073	26
A4R3	RC07GF752J	RESISTOR 7.5K 1/4W 5%	JEDEC	5-10073	27
A4R4	RN60D3401F	RESISTOR 3.4K 1%	JEDEC	5-60212	28
A4R5	T.B.D.	RESISTOR RN60D 1%			29
A4R6	2387-1K	POT 1K	91637	5-70082	30
A4R7	RN60C6042F	RESISTOR 60.4K 1%	JEDEC	5-60211	31
A4R8	T.B.D.	RESISTOR RN60D 1%			32
A4R9	RC07GF106J	RESISTOR 10M 1/4W 5%	JEDEC	5-10135	33
A4R10	RC07GF106J	RESISTOR 10M 1/4W 5%	JEDEC	5-10135	34
A4R11	RC07GF104J	RESISTOR 100K 1/4W 5%	JEDEC	5-10100	35
A4R12	RC07GF152J	RESISTOR 1.5K 1/4W 5%	JEDEC	5-10057	36

MODEL 8300 | CALICO P/N 8300-708 | ASSY R.O. A4

TITLE OHMS CONV. BOARD ASSY | SHT 4 OF 5

CALICO CALIFORNIA INSTRUMENTS CORP. SAN DIEGO, CALIFORNIA | CODE IDENT 16067 | PARTS LIST

REF. DES.	MFG. NUMBER.	DESCRIPTION	CODE IDENT	CALICO STOCK NUMBER	ITEM NO.
A4R13	RC07GF102J	RESISTOR 1K 1/4W 5%	JEDEC	5-10053	37
A4R14	3300A-014-8	RESISTOR 6K .01%	16067	5-80014	38
A4R15	2387-100Ω	POT 100Ω	91637	5-70088	39
A4R16	3300A-014-41	RESISTOR 59.95K .05%	16067	5-80071	40
A4R17	2387-1K	POT 1K	91637	5-70082	41
A4R18	3300A-014	RESISTOR 599.7K .05%	16067	5-80072	42
A4R19	4823	RESISTOR 1K 11W	44655	5-50107	43
					44
A4TP1	430-108	TEST POINT--BRN.	83330	2-41089	45
A4TP2	430-102	TEST POINT--RED	83330	2-41085	46
A4TP3	430-106	TEST POINT--ORN.	83330	2-41086	47
A4TP4	430-107	TEST POINT--YEL.	83330	2-41087	48
A4TP5	430-104	TEST POINT--GRN.	83330	2-41090	49
					50
	8300-220-1	SHIELD	16067	1-42045	51
					52
	60-5001-19-13	ELCO PIN	91662	2-40290	53
					54
	4-40 1/4 LG.	SCREW, PAN HEAD			55
	6-32 1/4 LG.	SCREW, PAN HEAD			56
					57
					58
	#4	WASHER, INT. STAR			59
	#6	WASHER, INT. STAR			60
					61
	#6-32	NUT			62
					63
	24 AWG	WIRE, BUSS			64

MODEL	8300	CALICO P/N	8300-708	ASSY R.O.
TITLE	OHMS CONV. BD. ASSY	SHT 5 OF 5		A4

DETAILED INSTRUCTIONS
FOR
FREQUENCY CONVERTOR
OPTION "H"
SUB – ASSY A9
CALICO P/N 8300 – 707

ACCEPTANCE TEST PROCEDURE

Select the KH_Z function and the 10 range. Apply a 10 KH_Z sine wave to the input. Measure the applied frequency with a .002% digital counter. Compare the reading on the counter. They should agree within ±.02%.

THEORY OF OPERATION

GENERAL

The digital frequency counter is in two sections; the gating circuitry contained on the 8300-707 board and the output counter contained on the 8300-700. The explanation of the output counter is contained in the DC Volts section of this manual. A schematic for the gating circuitry is contained on drawing E8300-077. Block and timing diagrams which illustrate the theory of operation are shown in Figure 1 and Figure 2.

The gating circuitry provides gate times of 10 seconds, 1 second, 100 milliseconds and 10 milliseconds. This corresponds to full scale frequencies of 1 KH_Z, 10 KH_Z, 100 KH_Z and 1 MH_Z.

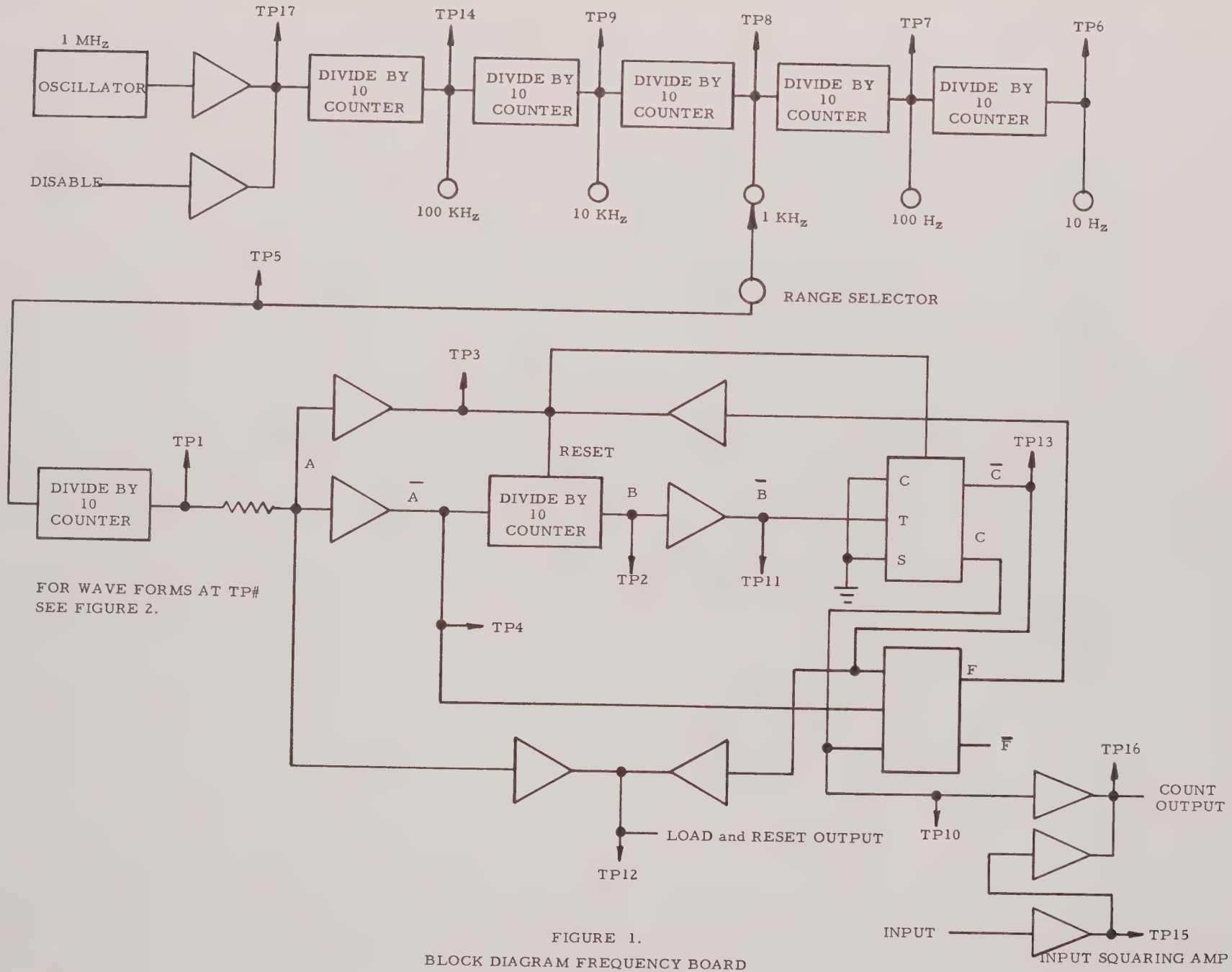

FIGURE 1.
BLOCK DIAGRAM FREQUENCY BOARD

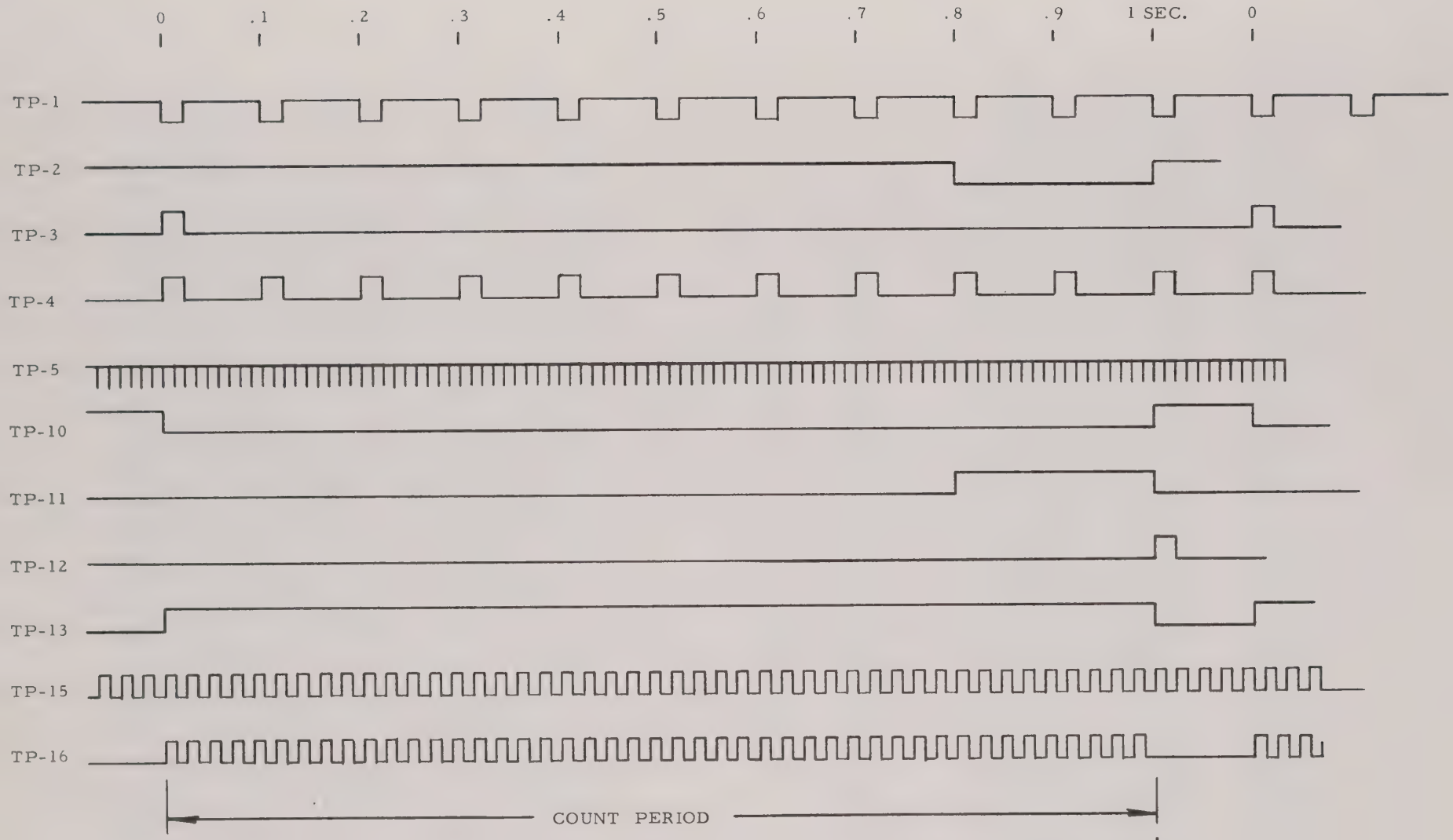

All waveforms shown on the 10 KH_z range with a 50 H_z input.

FIGURE 2.

TIMING DIAGRAM

DETAILED CIRCUIT OPERATION

The gating circuitry is divided into three sections; the crystal oscillator and frequency dividers, the input squaring amplifier, and the gate scaling circuit.

The 1 MH_z crystal oscillator is composed of two dual nor gates, A9IC11, crystal A9Y1 and the LC tuned circuit A9C4 and A9L1. The oscillator output A9IC11 Pin 8 is applied to the input of dual nor gate A9IC11 Pin 7 through crystal A9Y1. The output of nor gate A9IC11 Pin 5 is fed back to the input of the first nor gate A9IC11 Pin 10 through tuned LC circuit A9L1 and A9C4. The 1 MH_z output A9IC11 Pin 8 is applied to innerting gate A9IC8 Pin 13 through A9R8. A CLOCK STOP input is available at A9 Pin 12. This input feeds inverter A9IC8 Pin 12 whose output, A9IC8 Pin 3, connects to the output of the inverter that is driven by oscillator A9IC8 Pin 2. When A9 Pin 12 is driven positive, the inverter outputs at A9IC8 Pins 2 and 3 are forced on to ground and stop the 1 MH_z signal.

This mode is only used for system applications. Normally the 1 MH_z output signal at A9IC8 Pin 2 is allowed to run whenever the KH_z function is selected. The 1 MH_z signal feeds the input to a cascaded string of divide by ten counters, A9IC1, A9IC2, A9IC3, A9IC3 and A9IC5.

TEST POINT	FREQUENCY
TP-17	1 MH_z
TP-14	100 KH_z
TP-9	10 KH_z
TP-8	1 KH_z
TP-7	100 H_z
TP-6	10 H_z

The outputs from TP-6, TP-7, TP-8 and TP-9 are selected by the range switch and fed into the gate time scaling circuit at A9TP5. The gate time scaling circuit is composed of two divide by ten counters, A9IC6 and A9IC7, one dual JK flip flop A9IC10, and one hex-inverter A9IC9. The purpose of this circuit is to provide a divide by one hundred and ten counter whose output is true for 100 input counts and false for 10 input counts. The input at A9TP-5 drives a divide by ten counter A9IC6. The output of this counter, A9TP1, is fed to the inputs of three inverters through isolation resistor A9R7.

The inverter output A9TP4 drives the second divide by ten counter A9IC7. This counter output A9TP-2 drives an inverter whose output, A9TP-11 drives the clock input to a JK flip flop. After counting 100 input counts, the output at A9TP11 turns on to ground causing A9TP13 to turn on to ground. This, in turn, causes the output at A9TP12 to drive positive. The positive state of A9TP12 causes the data accumulated in the decade counters on the A2 board to be transferred into the storage register for display. The next negative going slope at A9TP4 advances the output of the second JK flip flop A9IC10 Pin 9 on to ground. At the same time, the output at A9TP1 drives positive causing the output at A9TP12 on to ground. The negative going slope at A9TP12 resets the decade counters on the A2 board to all zeros. The next negative pulse at A9TP1 causes A9TP3 to drive positive reseting the divide

by ten counter and the first JK flip flop. At this time, master gate A9TP10 has again opened and started accumulating data in the decade counters on the A2 board. The result is the master gate A9TP10 is open for 100 input counts and closed for 10 input counts.

The unknown input frequency is fed into the gate of source follower A9Q1. The output of the source follower drives an inverter whose output, A4TP15, drives a positive feedback amplifier. The input to the positive feedback amplifier is applied through A9R2. The in phase output A9TP16 is returned to the input through A9R3 and A9C3.

As the input voltage to the source follower exceeds .6 volts peak, the input clip diodes A9CR1 and A9CR2 conduct to ground, thus limiting the input voltage to .6 volts peak.

CALIBRATION AND TEST PROCEDURE

TEST EQUIPMENT REQUIRED

a) Oscilloscope, Tektronix 531 or equivalent

b) Frequency Standard, Hp 5243L or equivalent

CALIBRATION PROCEDURE

Select the KH_Z function and the 10 range. Connect the 8300 input to the calibrator output of the oscilloscope. Select the amplitude of .2 volts peak-to-peak. Connect the oscilloscope input to A9TP16. Adjust A9R5 for symmetrical square wave at A9TP16.

Connect the 8300 input to the 10 KH_Z output from the frequency standard. Adjust A9C4 until the 8300 reads 10.000 ±2 digits.

Select the 1 range and connect the 8300 input to the 1 KH_Z output from the frequency standard. The 8300 should read 1.0000 ±2 digits.

Select the 100 range and connect the 8300 input to the 100 KH_Z output from the frequency standard. The 8300 should read 100.00 ±2 digits.

Select the 1000 range and connect the 8300 input to the 1 MH_Z output from the frequency standard. The 8300 should read 1000.0 ±2 digits.

TEST PROCEDURE

The following test procedure or any part of it may be performed if required. This test procedure may be performed only after completing the calibration procedure.

The procedure covers the following:

a) Temperature coefficient

b) Time stability.

TEMPERATURE COEFFICIENT

Select the KH_Z function and the 10 range. Allow the unit a minimum of one hour to stabilize at room temperature 25°C. Apply 10 KH_Z from the frequency standard and record the reading. Place the unit in a heat chamber and elevate the temperature to 50°C. Allow a minimum of one hour to stabilize and record the reading. The reading should vary less than 3 digits.

TIME STABILITY

Select the KH_Z function and the 10 range. Allow the unit a minimum of two hours to stabilize. Apply a 10 KH_Z input from the frequency standard and record the reading. Monitor the display for a 24 hours period. The reading should not change more than ±.01%.

REVISIONS						
REV	AUTH	DESCRIPTION	ZONE	EFF ON	DATE	APRD

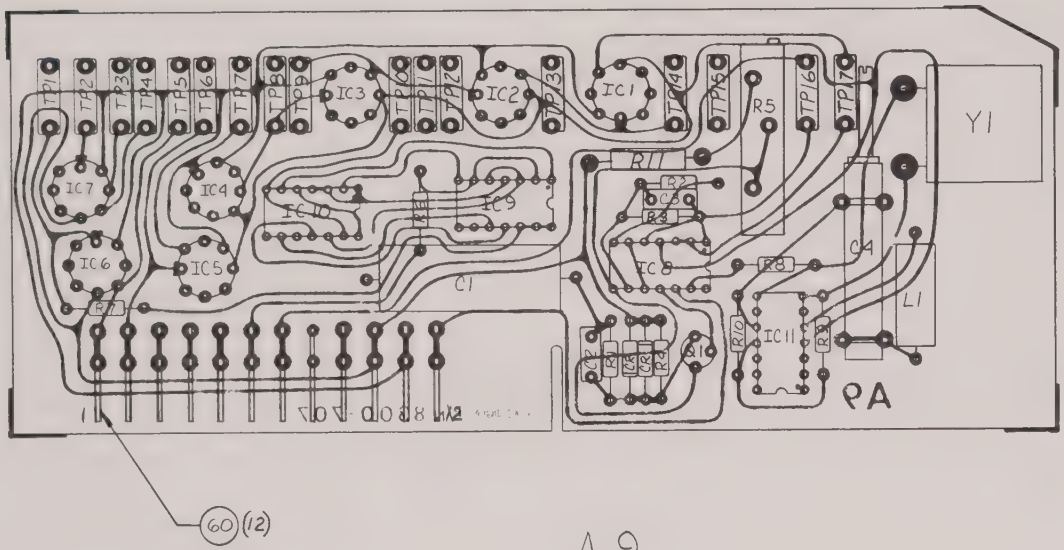

A 9
-1 ASSEMBLY
VIEW COMPONENT SIDE

REQD PER ASSY	ITEM NO.	PART NUMBER	PART NAME	MATERIAL — SPECIFICATION	CODE IDENT	FINISH	REF DES.	ZONE
/		PL8300-707	PARTS LIST	SHEETS 4 & 5				
-1								

DIM IN INCHES
TOLERANCES
.XXX = .010
.XX = .03
X° = 30'

BREAK ALL SHARP CORNERS & EDGES
MACH SURFACES ✓

DWG SIZE C

TITLE FREQUENCY BOARD (A9)
PC BOARD ASSEMBLY

MODEL 8300

RELEASE 2/17/9
CHECKER 2/12/9
DESIGN
DRFTSMN T BROWN 1/20/9
PURCHASING
PROJ ENGR
CHF ENGR

CALICO
CALIFORNIA INSTRUMENTS CORP
SAN DIEGO, CALIFORNIA

CONTRACT NO
CODE IDENT 16067
DWG NO. C8300-707
REV 1
SCALE 2/1
SHEET 2 OF 5

DASH NO.	QTY REQD	NEXT ASSEMBLY	EFF ON	AUTH

EXCEPT AS OTHERWISE PROVIDED BY CONTRACT, THESE DRAWINGS AND SPECIFICATIONS ARE THE PROPERTY OF CALICO AND SHALL NOT BE REPRODUCED OR COPIED OR USED AS THE BASIS FOR THE MANUFACTURE OR SALE OF APPARATUS WITHOUT WRITTEN PERMISSION.

2. MAX. COMPONENT HEIGT TO BE .30
1. FOR SCHEMATIC SEE DWG. NO. E8300-077.

NOTES (UNLESS OTHERWISE SPECIFIED)

C8300-707 A

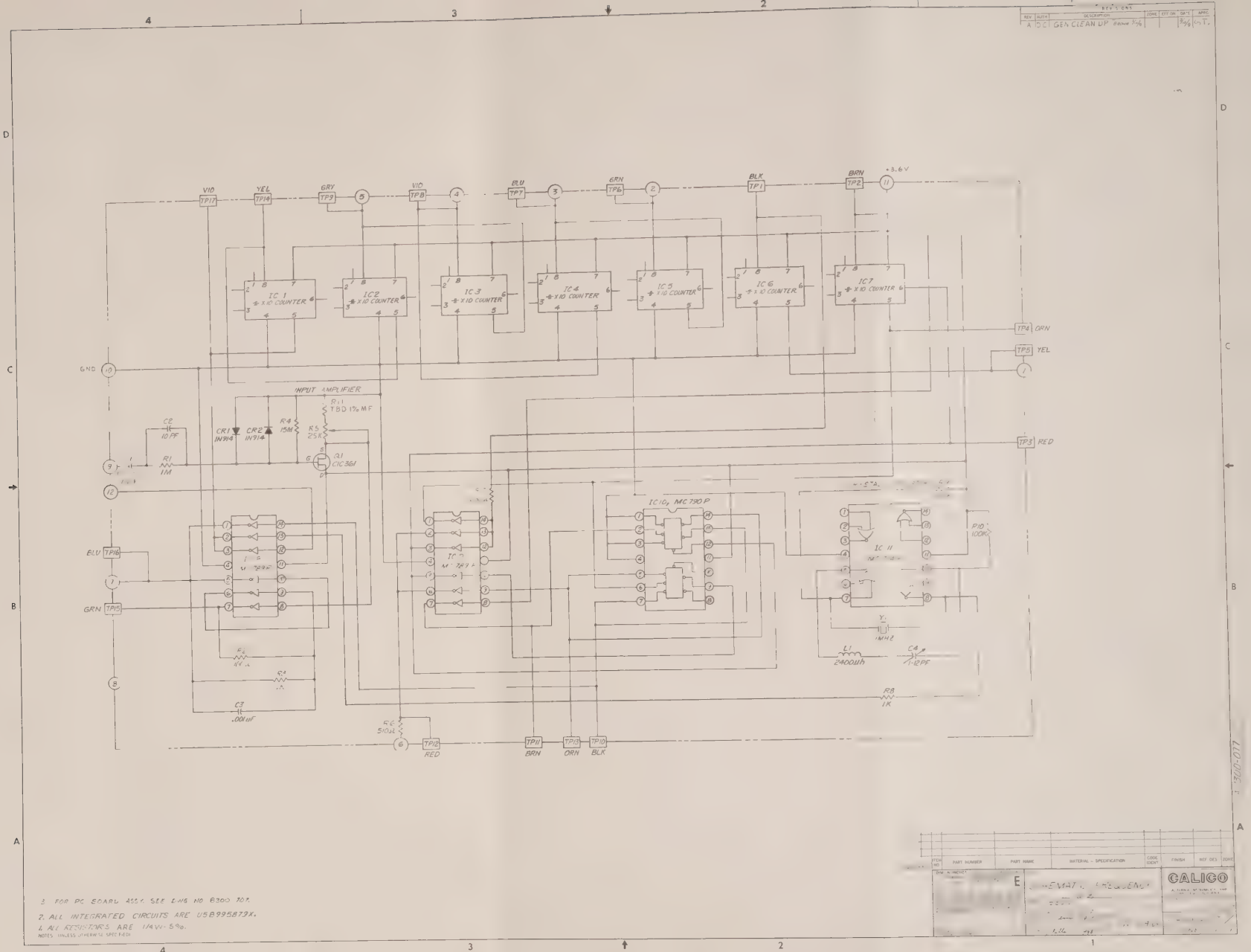

REVISIONS
REV
AUTH
DESCRIPTION
ZONE
EFF ON
DATE
APPR
A
DC
GEN CLEAN UP
VIO TP17
YEL TP14
GRY TP9
VIO TP8
BLU TP7
GRN TP6
BLK TP1
BRN TP2
+3.6V
IC 1 ÷ X10 COUNTER
IC2 ÷ X10 COUNTER
IC 3 ÷ X10 COUNTER
IC 4 ÷ X10 COUNTER
IC 5 ÷ X10 COUNTER
IC 6 ÷ X10 COUNTER
IC 7 ÷ X10 COUNTER
TP4 ORN
TP5 YEL
TP3 RED
GND
INPUT AMPLIFIER
R11 TBD 1% MF
C2 10 PF
CR1 1N914
CR2 1N914
R4 15M
R5 25K
Q1 CIC361
R1 1M
IC10, MC790P
IC 11
P10 100K
BLU TP16
GRN TP15
Y1 1MHZ
L1 2400uh
C4 1-12PF
R8 1K
C3 .001uF
R6 510Ω
TP12 RED
TP11 BRN
TP13 ORN
TP10 BLK
3. FOR PC BOARD ASSY. SEE DWG NO 8300 707.
2. ALL INTEGRATED CIRCUITS ARE USB995879X.
1. ALL RESISTORS ARE 1/4W-5%.
NOTES: UNLESS OTHERWISE SPECIFIED
ITEM NO
PART NUMBER
PART NAME
MATERIAL - SPECIFICATION
CODE IDENT
FINISH
REF DES
ZONE
E
CALICO

CALICO CALIFORNIA INSTRUMENTS CORP. SAN DIEGO, CALIFORNIA | CODE IDENT 16067 | PARTS LIST

REF. DES.	MFG. NUMBER	DESCRIPTION	CODE IDENT	CALICO STOCK NUMBER	ITEM NO.
A9	8300-707	FREQUENCY BOARD	16067		1
	-7	P.C. BOARD	16067	1-55041	2
	SEE SHEET 3	TERMINAL			3
					4
A9C1	ZD1A103	CAPACITOR .01μf 100V	12406	6-10520	5
A9C2	CM05C100J03	CAPACITOR 10 pf	04062	6-10004	6
A9C3	225P10291	CAPACITOR .001	56289	6-10456	7
A9C4	VC58G	VARIABLE CAPACITOR 1-12pf	73899	6-10458	8
					9
A9CR1	IN914	DIODE	JEDEC	3-10118	10
A9CR2	IN914	DIODE	JEDEC	3-10118	11
					12
A9IC1	U5B995879X	I.C.	02335	3-30114	13
A9IC2	U5B995879X	I.C.	02335	3-30114	14
A9IC3	U5B995879X	I.C.	02335	3-30114	15
A9IC4	U5B995879X	I.C.	02335	3-30114	16
A9IC5	U5B995879X	I.C.	02335	3-30114	17
A9IC6	U5B995879X	I.C.	02335	3-30114	18
A9IC7	U5B995879X	I.C.	02335	3-30114	19
A9IC8	MC 789P	I.C.	04713	3-30112	20
A9IC9	MC 789P	I.C.	04713	3-30112	21
A9IC10	MC 790P	I.C.	04713	3-30113	22
A9IC11	MC 724P	I.C.	04713	3-30111	23
					24
A9L1	9220-46	CHOKE 2400μh	76493	5-90012	25
					26
A9Q1	CIC 361	F.E.T.	16067	3-30130	27
					28
A9R1	RC07GF105J	RESISTOR 1M 1/4W 5%	JEDEC	5-10123	29
A9R2	RC07GF101J	RESISTOR 100Ω 1/4W 5%	JEDEC	5-10029	30
A9R3	RC07GF102J	RESISTOR 1K 1/4W 5%	JEDEC	5-10053	31
A9R4	RC07GF156J	RESISTOR 15M 1/4W 5%	JEDEC	5-10137	32
A9R5	2187-25K	POT 25K	91637	5-75027	33
A9R6	RC07GF511J	RESISTOR 510Ω 1/4W 5%	JEDEC	5-10046	34
A9R7	RC07GF681	RESISTOR 680Ω 1/4W 5%	JEDEC	5-10049	35
A9R8	RC07GF102J	RESISTOR 1K 1/4W 5%	JEDEC	5-10053	36

MODEL 8300 | CALICO P/N 8300-707 | ASSY R.O.

TITLE FREQUENCY BOARD ASSY | SHT 4 OF 5 | A9

CALICO | CALIFORNIA INSTRUMENTS CORP. SAN DIEGO, CALIFORNIA | CODE IDENT 16067 | PARTS LIST

REF. DES.	MFG. NUMBER	DESCRIPTION	CODE IDENT	CALICO STOCK NUMBER	ITEM NO.
A9R9	RC07GF104J	RESISTOR 100K 1/4W 5%	JEDEC	5-10100	37
A9R10	RC07GF104J	RESISTOR 100K 1/4W 5%	JEDEC	5-10100	38
A9R11	T.B.D.	RESISTOR RN60D 1%			39
A9TP1	430-103	TEST POINT--BLK.	83330	2-41088	40
A9TP2	430-108	TEST POINT--BRN.	83330	2-41089	41
A9TP3	430-102	TEST POINT--RED	83330	2-41085	42
A9TP4	430-106	TEST POINT--ORN.	83330	2-41086	43
A9TP5	430-107	TEST POINT--YEL.	83330	2-41087	44
A9TP6	430-104	TEST POINT--GRN.	83330	2-41090	45
A9TP7	430-105	TEST POINT--BLU.	83330	2-41091	46
A9TP8	430-112	TEST POINT--VIO.	83330	2-41092	47
A9TP9	430-113	TEST POINT--GREY	83330	2-41093	48
A9TP10	430-103	TEST POINT--BLK.	83330	2-41088	49
A9TP11	430-108	TEST POINT--BRN.	83330	2-41089	50
A9TP12	430-102	TEST POINT--RED	83330	2-41085	51
A9TP13	430-106	TEST POINT--ORN.	83330	2-41086	52
A9TP14	430-107	TEST POINT--YEL.	83330	2-41087	53
A9TP15	430-104	TEST POINT--GRN.	83330	2-41090	54
A9TP16	430-105	TEST POINT--BLU.	83330	2-41091	55
A9TP17	430-112	TEST POINT--VIO.	83330	2-41092	56
					57
A9Y1	CR18A/L	CRYSTAL 1MHz	13454	3-30135	58
					59
	60-5001-19-13	ELCO PIN	91662	2-40290	60

MODEL 8300 | CALICO P/N 8300-707 | ASSY R.O. A9

TITLE FREQUENCY BOARD ASSY | SHT 5 OF 5

DETAILED INSTRUCTIONS
FOR
CURRENT CONVERTOR
OPTION "C"
SUB – ASSY A5
CALICO P/N 8300 – 706

ACCEPTANCE TEST PROCEDURE

This section of the acceptance test procedure should be performed only after completing Section 2.4 under DC Volts.

Select the MA function and the 10 range. Apply a 10.000 milliampere input current from a Fluke 382A or equivalent current source. The 8300 should read 10.000 ±5 digits.

THEORY OF OPERATION

The 8300-706 current board consists of five separate precision current shunts. A block diagram which illustrates the theory of operation is shown in Figure 1. A schematic diagram is contained on drawing C8300-076.

The gain of 100 preamp setting is used on all current ranges, thus providing a 0.1 volt voltage drop across the current shunt.

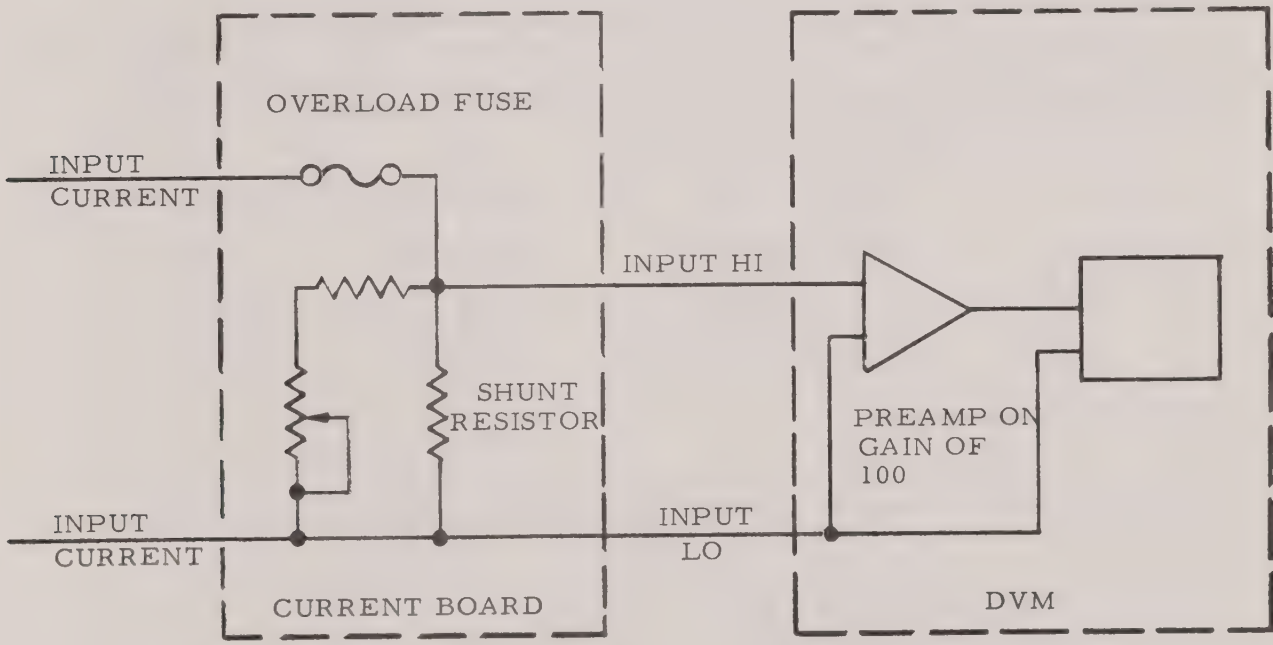

FIGURE 1.

DETAILED CIRCUIT DESCRIPTION

The following circuit description will cover only the 10 milliampere range since all five current shunts are the same except for value.

The unknown input current enters through the protection fuse A5F3. The main shunt resistor A5R7 has a center value that is 1% high. A parallel path provided by A5R8 and 1/2 of A5R9 provides a 1% load across A5R7. Therefore, the impedance from A5 Pin 1 to A5 Pin8 is 10.00 Ω.

CALIBRATION AND TEST PROCEDURE

This procedure may be performed only after completing the calibration procedure in Section 4 under DC Volts.

TEST EQUIPMENT REQUIRED

a) Fluke 382A DC Current Standard or equivalent

b) Superior Electric 216 variac or equivalent

c) Triplett 601 AC wattmeter/voltmeter or equivalent

CALIBRATION PROCEDURE

The following calibration procedure may be performed on a routine basis to insure that the unit remains within the specified tolerances. This procedure should always be performed after any repairs are made on the basic accuracy determining circuitry. Before calibrating the unit, apply AC power and allow a minimum of one hour to permit the internal circuitry to stabilize.

Select the MA function and the 1000 range. Short the input leads together and adjust the front panel zero control if required.

Apply the following input currents on the appropriate ranges and make the corresponding adjustments if necessary.

RANGE	INPUT ±.01%	8300 TOLERANCE	ADJUSTMENT
1000 MA	1.0000 ampere	±5 digits	A5R3
100 MA	100.0 milliampere	±5 digits	A5R6
10 MA	10.00 milliampere	±5 digits	A5R9
1 MA	1.000 milliampere	±5 digits	A5R12
.1 MA	100.0 microamperes	±5 digits	A5R15

TEST PROCEDURE

The following test procedure or any part of it may be performed if required. This test procedure may be performed only after completing the calibration procedure.

This procedure covers the following:

a) Temperature Coefficient

b) Time Stability

c) Resolution

c) Line Voltage Range

TEMPERATURE COEFFICIENT

Allow the machine to warm up for one hour at room temperature, 25°C and check the full scale calibration as given in the calibration procedure. Place the unit in an environmental chamber and raise the temperature to 50°C. Allow the unit at least one hour to stabilize at 50°C. The allowable full scale excursion is ±13 digits.

TIME STABILITY

Allow the 8300 to stabilize at 25°C for two hours. Connect the input to a precision full scale DC current. Monitor the 8300 for 24 hours and check for a 3 digit or less change.

RESOLUTION

Select the MA function and the 10 range. Connect the 8300 to a precision DC current source. Apply an input of 10.000 milliamperes. Vary the input by precisely 1 microampere. The display should read this one digit change.

LINE VOLTAGE RANGE

The following line voltage tests are made around 115 volts AC 60 H_z. If the unit is to be used on 230 volts AC or other than 60 H_z the test should be run at that voltage or frequency.

Connect the variac to the 115 volts AC 60 H_z line. Connect the wattmeter/voltmeter to the output of the variac and connec the 8300 to the wattmeter/voltmeter output. Apply a full scale input current to the 8300. Vary the line voltage from 105 to 125 volts AC and check for less than a 2 digit change in the reading.

REVISIONS						
REV	AUTH	DESCRIPTION	ZONE	EFF ON	DATE	APRD

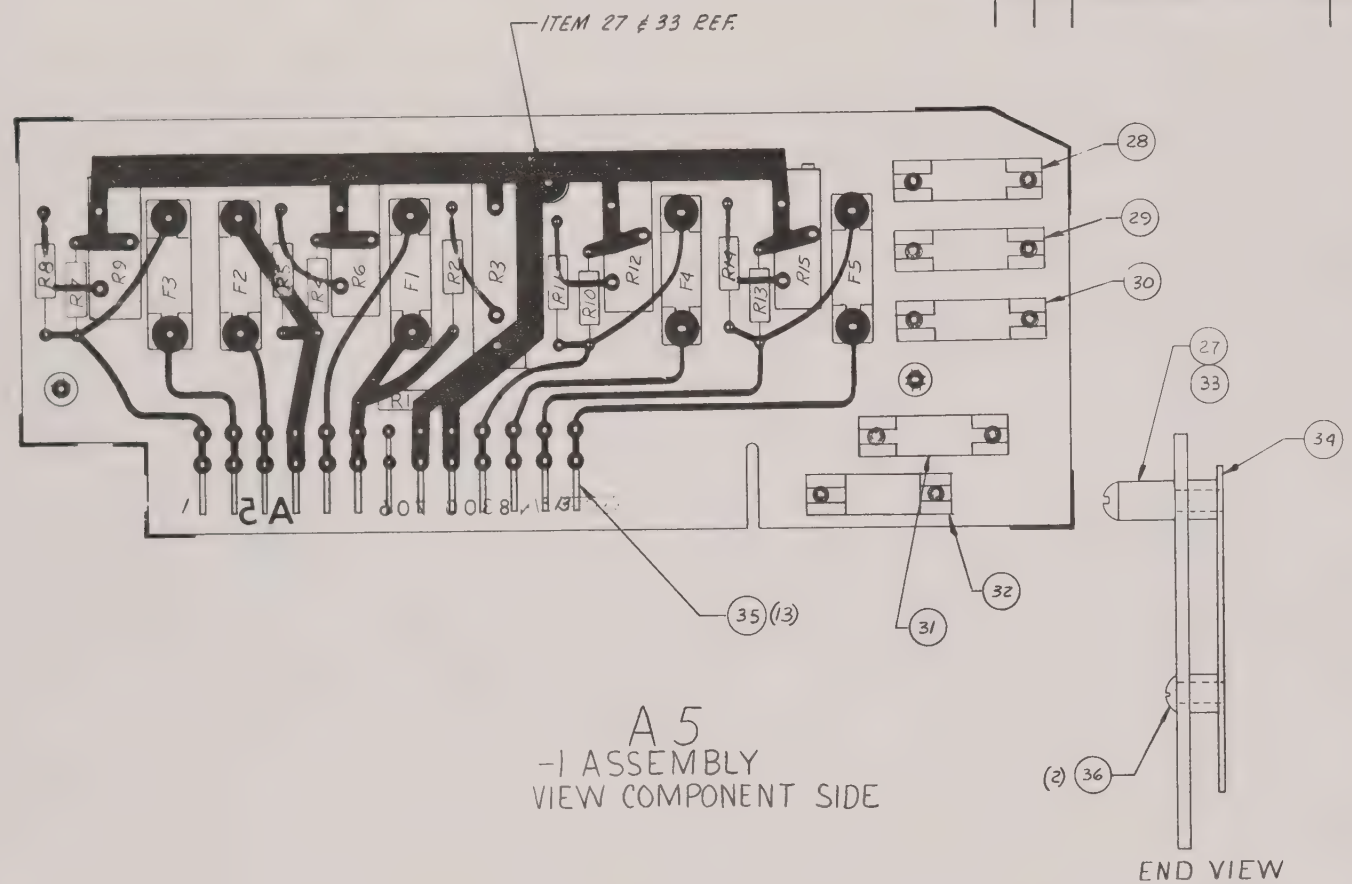

A 5
-1 ASSEMBLY
VIEW COMPONENT SIDE

END VIEW

REQD PER ASSY	ITEM NO	PART NUMBER	PART NAME	MATERIAL — SPECIFICATION	CODE IDENT	FINISH	REF DES.	ZONE
1	-1	PL8300-706	PARTS LIST	SHEET 4				

2. MAX. COMPONENT HEIGHT TO BE .42
1. FOR SCHEMATIC SEE DWG. NO. C8300-076.

NOTES: (UNLESS OTHERWISE SPECIFIED)

DIM IN INCHES TOLERANCES .XXX = .010 .XX = .03 X° = 30'

BREAK ALL SHARP CORNERS & EDGES "MACH SURFACES" ✓

DWG SIZE C

EXCEPT AS OTHERWISE PROVIDED BY CONTRACT, THESE DRAWINGS AND SPECIFICATIONS ARE THE PROPERTY OF CALICO AND SHALL NOT BE REPRODUCED OR COPIED OR USED AS THE BASIS FOR THE MANUFACTURE OR SALE OF APPARATUS WITHOUT WRITTEN PERMISSION.

DASH NO	QTY REQD	NEXT ASSEMBLY	EFF ON	AUTH

TITLE CURRENT BOARD (A5)
PC BOARD ASSEMBLY

MODEL 8300

RELEASE	E. Shultz	2/27/69	PURCHASING	
CHECKER	[illegible]	2/27/69		
DESIGN			PROJ ENGR	G. THRAP 2/27/69
DRFTSMN	T. BROWN	1/20/69	CHF ENGR	

CALICO
CALIFORNIA INSTRUMENTS CORP
SAN DIEGO, CALIFORNIA

CONTRACT NO.
CODE IDENT 16067
DWG NO. C8300-706
REV. A
SCALE 2/1
SHEET 2 OF 4

CALCO F 102

REVISIONS						
REV	AUTH	DESCRIPTION	ZONE	EFF ON	DATE	APRD

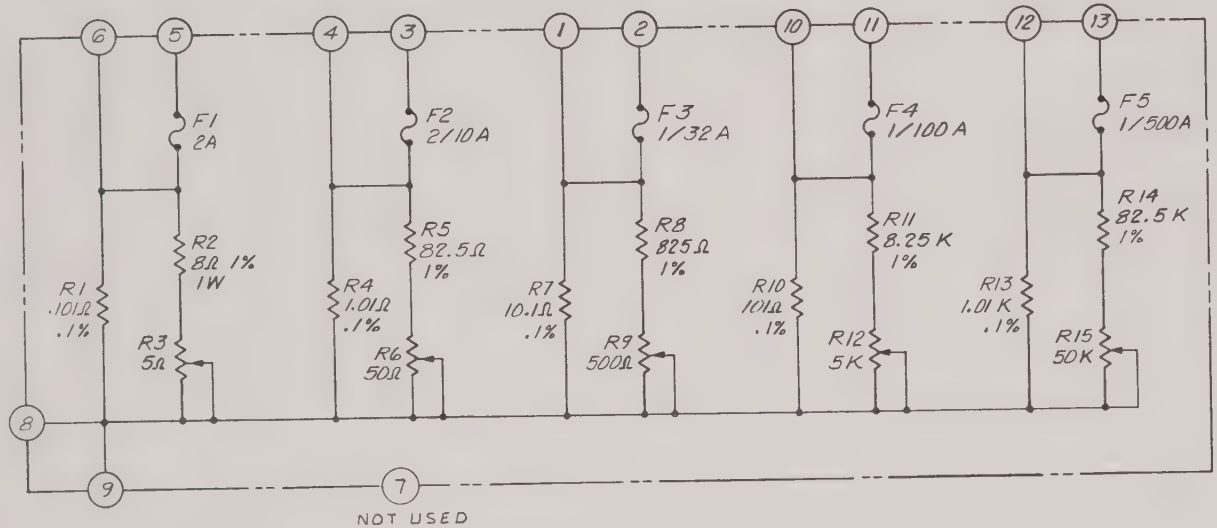

2. FOR P.C. BOARD ASSY. SEE DWG. NO. 8300-706.

1. ALL RESISTORS ARE 1/4W-5%.

NOTES: (UNLESS OTHERWISE SPECIFIED)

REQD PER ASSY	ITEM NO.	PART NUMBER	PART NAME	MATERIAL — SPECIFICATION	CODE IDENT	FINISH	REF DES	ZONE

DASH NO	QTY REQD	NEXT ASSEMBLY	EFF ON	AUTH

DIM IN INCHES TOLERANCES .XXX = .010 .XX = .03 X° = 30'

BREAK ALL SHARP CORNERS & EDGES MACH SURFACES ✓

DWG SIZE C

EXCEPT AS OTHERWISE PROVIDED BY CONTRACT, THESE DRAWINGS AND SPECIFICATIONS ARE THE PROPERTY OF CALICO AND SHALL NOT BE REPRODUCED OR COPIED OR USED AS THE BASIS FOR THE MANUFACTURE OR SALE OF APPARATUS WITHOUT WRITTEN PERMISSION.

TITLE SCHEMATIC - CURRENT BOARD (A5)

MODEL 8300

RELEASE				
CHECKER		1/14/69	PURCHASING	
DESIGN			PROJ ENGR	GT 1/17/68
DRFTSMN		12/4/68	CHF ENGR	

CALICO
CALIFORNIA INSTRUMENTS CORP
SAN DIEGO, CALIFORNIA

CONTRACT NO.

CODE IDENT 16067

DWG NO. C 8300-076 REV /

SCALE NONE SHEET 1 OF 1

C 8300-076 /

AC CURRENT MODE PRINT-OUT

CALICO CALIFORNIA INSTRUMENTS CORP. SAN DIEGO, CALIFORNIA

CODE IDENT 16067

PARTS LIST

REF. DES.	MFG. NUMBER	DESCRIPTION	CODE IDENT	CALICO STOCK NUMBER	ITEM NO.
A5	8300-706	CURRENT BOARD	16067		1
	-7	P.C. BOARD	16067	1-55040	2
	SEE SHEET 3	FUSE CLIP			3
	SEE SHEET 3	RIVET, ROUND HEAD, HOLLOW BRASS			4
					5
A5F1	AGX	FUSE 2A	71400	2-40289	6
A5F2	AGX	FUSE 2/10A	71400	2-40288	7
A5F3	AGX	FUSE 1/32A	71400	2-40280	8
A5F4	AGX	FUSE 1/100A	71400	2-40282	9
A5F5	AGX	FUSE 1/500A	71400	2-40281	10
					11
A5R1	T2 .101Ω .1% C10	RESISTOR .101Ω .1%	12463	5-80084	12
A5R2	RS-1A	RESISTOR 8Ω 1%	91637	5-50105	13
A5R3	3053P-1-5RO	POT 5Ω	80294	5-75028	14
A5R4	T2 1.01Ω .1% C10	RESISTOR 1.01Ω .1%	12463	5-80083	15
A5R5	RN60D82R5F	RESISTOR 82.5Ω 1%	JEDEC	5-60003	16
A5R6	2387-50Ω	POT 50Ω	91637	5-70089	17
A5R7	3300A-014-40	RESISTOR 10.1Ω .1%	16067	5-80070	18
A5R8	RN60D8250F	RESISTOR 825Ω 1%	JEDEC	5-60188	19
A5R9	2387-500Ω	POT 500Ω	91637	5-70090	20
A5R10	3300A-014-39	RESISTOR 101Ω .1%	16067	5-80069	21
A5R11	RN60D8251F	RESISTOR 8.25K 1%	JEDEC	5-60074	22
A5R12	2387-5K	POT 5K	91637	5-70083	23
A5R13	3300A-014-38	RESISTOR 1.01K .1%	16067	5-80068	24
A5R14	RN60D8252F	RESISTOR 82.5 K 1%	JEDEC	5-60189	25
A5R15	2387-50K	POT 50K	91637	5-70085	26
	8482	STAND OFF	83330		27
	AGX	FUSE 2A	71400	2-40289	28
	AGX	FUSE 2/10A	71400	2-40288	29
	AGX	FUSE 1/32A	71400	2-40280	30
	AGX	FUSE 1/100A	71400	2-40282	31
	AGX	FUSE 1/500A	71400	2-40281	32
	4-40 9/16 LG.	SCREW, ROUND HD. NYLON			33
	8300-220-1	SHIELD	16067		34
	60-5001-19-13	ELCO PIN	91662	2-40290	35
	4-40 1/4 LG.	SCREW, PAN HEAD			36

MODEL 8300 | CALICO P/N 8300-706 | ASSY R.O.

TITLE CURRENT BOARD ASSY | SHT 4 OF 4 | A5

DETAILED INSTRUCTIONS FOR AC CURRENT MODE

ACCEPTANCE TEST PROCEDURE

This section of the acceptance test procedure may be performed only after completing the sections under AC Volts and DC Current.

Using a hp 200 CD sine wave oscillator or equivalent and a Fluke 883A differential voltmeter or equivalent connect per Figure 1.

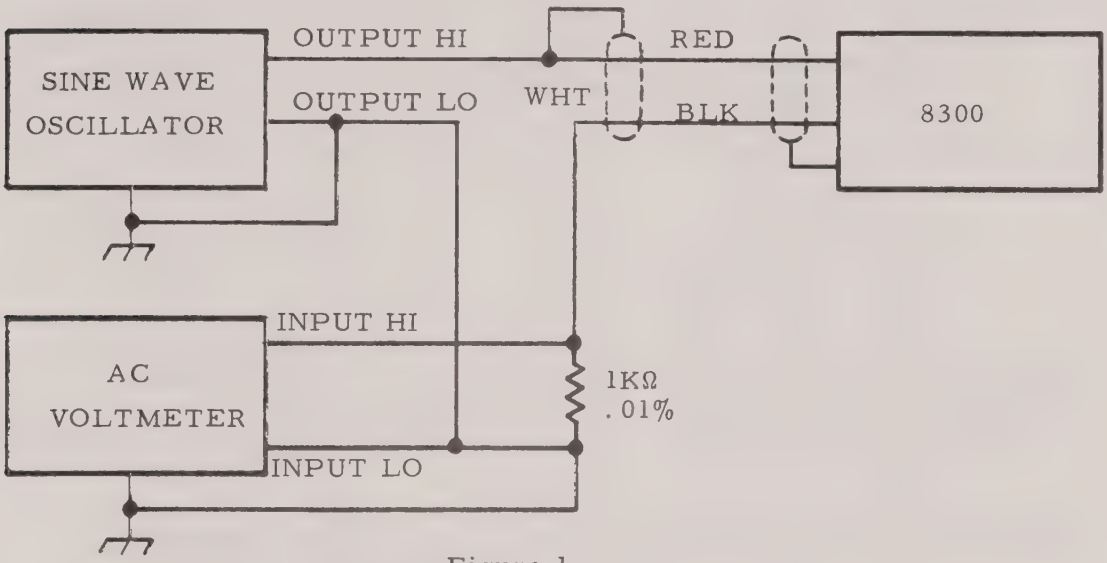

Figure 1.

Select the 10 range on the 8300. To select the AC current mode press the AC and MA buttons simultaneously. Select the 10 volts AC range on the 883A. Adjust the sine wave oscillator until the 883A reads 10.000 volts AC. The 8300 should read 10.000 MA - AC ±75 digits.

THEORY OF OPERATION

The AC current mode uses the DC current shunts contained on the A5 board in conjunction with the AC converter contained on the A6 board to measure AC current.

A full scale input current produces a voltage drop of 0.1 volts rms across the current shunt. This voltage is fed into the AC converter where it becomes 10 volts DC. This DC output voltage is measured by the DC voltmeter and displayed.

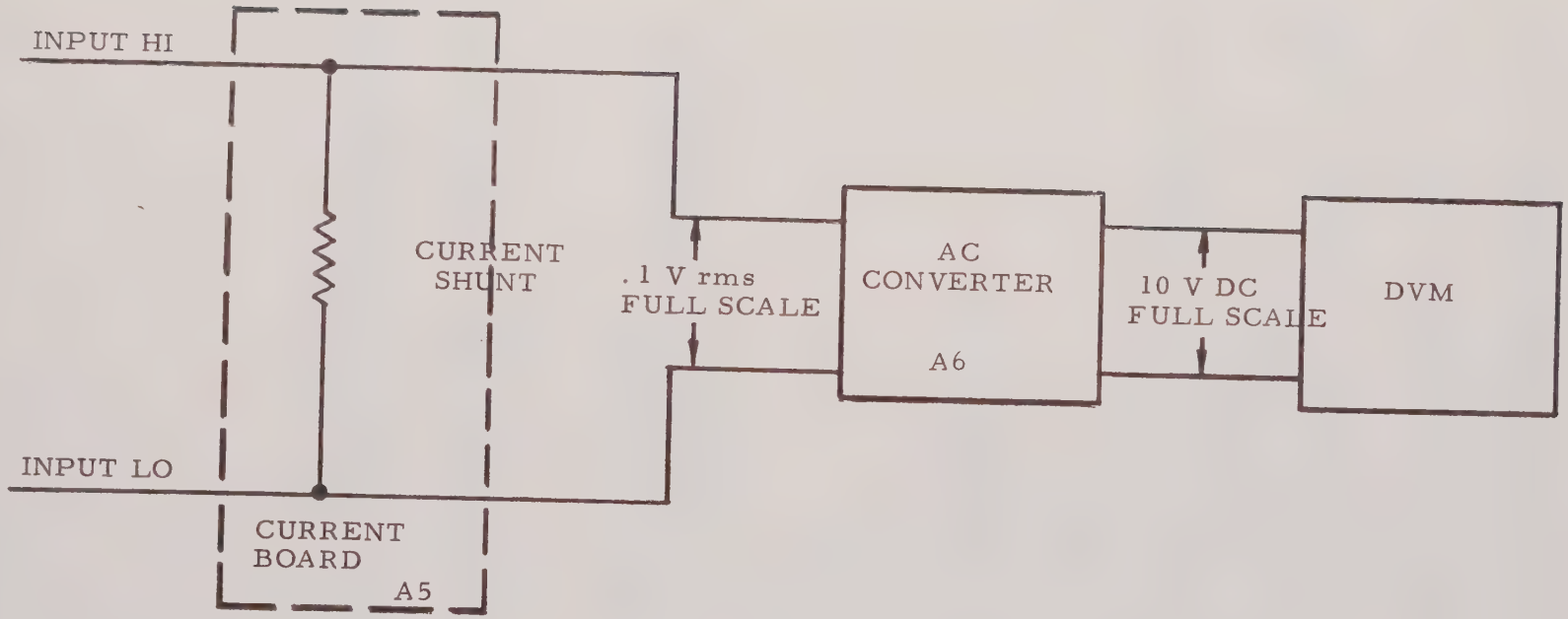

FIGURE 2.

AC CURRENT MODE

CALIBRATION AND TEST PROCEDURE

This procedure may be performed only after completing the calibration procedure for AC volts and DC current.

TEST EQUIPMENT REQUIRED

a) Optimation AC104A, AC voltage standard

b) Hp 741B differential voltmeter

c) Precision .01% non-inductive resistors in the following values:

1Ω - 10W
10Ω - 1W
100Ω - .5W
1KΩ - .5W
10KΩ - .5W

CALIBRATION PROCEDURE

The calibration of the AC current mode is accomplished by calibrating both the DC current board and the AC converter. After completing these calibration procedures the calibration of the AC current mode may be checked in the following manner:

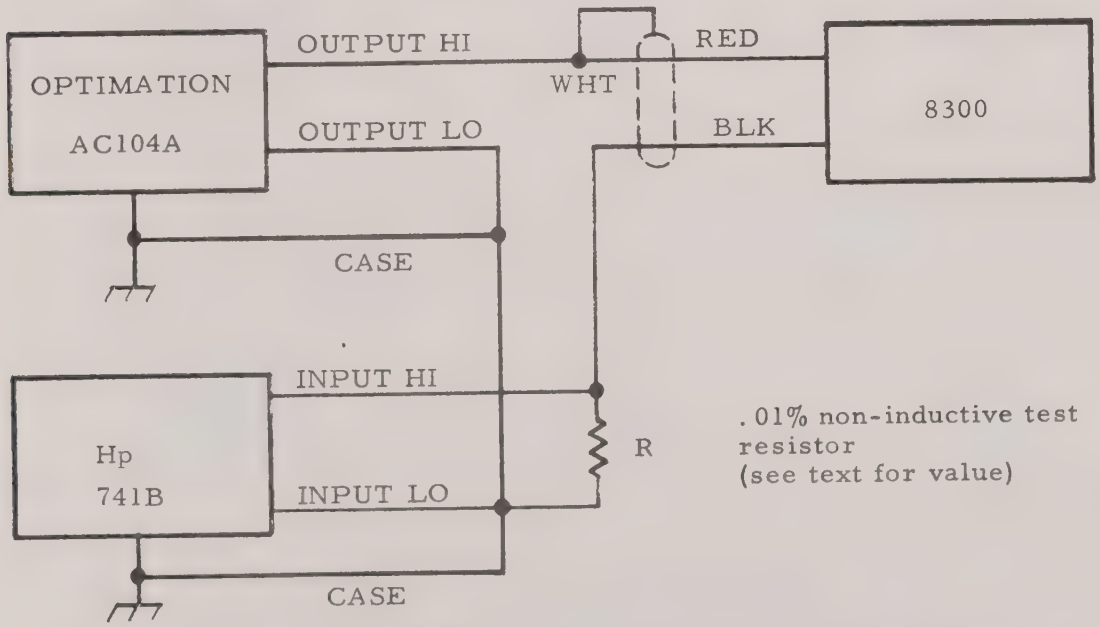

Figure 3

Connect the 8300 as shown in Figure 3. Select the AC current mode on the 8300 by simultaneously pressing the AC and MA buttons. Select the 1 volt AC range on the 741B AC voltmeter

Apply the following input currents to the 8300 and measure with the 741B AC voltmeter:

1000 MILLIAMPERES

Select the 1000 range on the 8300. Connect the 1Ω .01% non-inductive resistor across the 741B AC voltmeter.

INPUT CURRENT ±.05%	FREQUENCY	MAXIMUM ERROR
1.0000 Ampere	100 H_z	±75 Digits
1.0000 Ampere	1000 H_z	±75 Digits
1.0000 Ampere	10000 H_z	±75 Digits
.50000 Ampere	1000 H_z	±40 Digits
0.00000 Ampere	---	± 5 Digits

100 MILLIAMPERES

Select the 100 range on the 8300. Connect the 10Ω .01% non-inductive resistor across the 741B AC voltmeter.

INPUT CURRENT ±.05%	FREQUENCY	MAXIMUM ERROR
100.00 MA	100 H_z	±75 Digits
100.00 MA	1000 H_z	±75 Digits
100.00 MA	10000 H_z	±75 Digits
50.00 MA	1000 H_z	±40 Digits
00.00 MA	---	± 5 Digits

10 MILLIAMPERES

Select the 10 range on the 8300. Connect the 100Ω .01% non-inductive resistor across the 741B AC voltmeter.

INPUT CURRENT ±.05%	FREQUENCY	MAXIMUM ERROR
10.000 MA	100 H_z	±75 Digits
10.000 MA	1000 H_z	±75 Digits
10.000 MA	10000 H_z	±75 Digits
5.000 MA	1000 H_z	±40 Digits
0.000	---	± 5 Digits

1.0 MILLIAMPERES

Select the 1 range on the 8300. Connect the 1000Ω .01% non-inductive resistor across the 741B AC voltmeter.

INPUT CURRENT ±.05%	FREQUENCY	MAXIMUM ERROR
1.0000 MA	100 H_z	±75 Digits
1.0000 MA	1000 H_z	±75 Digits
1.0000 MA	10000 H_z	±75 Digits
0.5000 MA	1000 H_z	±40 Digits
.0000 MA	---	± 5 Digits

0.1 MILLIAMPERES

Select the .1 range on the 8300. Connect the 10 KΩ .01% non-inductive resistor across the input of the 741B AC voltmeter.

INPUT CURRENT ±.05%	FREQUENCY	MAXIMUM ERROR
0.10000 MA	100 H_z	±75 Digits
0.10000 MA	1000 H_z	±75 Digits
0.10000 MA	10000 H_z	±75 Digits
0.05000 MA	1000 H_z	±40 Digits
0.00000 MA	---	± 5 Digits

TEST PROCEDURE

The following test procedure or any part of it may be performed if required. This test procedure may be performed only after completing the calibration procedures for DC Current and AC Volts.

This procedure covers the following:

a) TEMPERATURE COEFFICIENT

b) TIME STABILITY

c) RESOLUTION

d) LINE VOLTAGE RANGE

TEMPERATURE COEFFICIENT

Allow the machine to warm up for one hour at room temperature, 25°C and check the full scale calibration as given in the calibration procedure. Place the unit in an environmental chamber and raise the temperature to 50°C. Allow the unit at least one hour to stabilize at 50°C. The allowable full scale excursion is ±37 digits.

TIME STABILITY

Allow the 3800 to stabilize at 25°C for two hours. Connect the input to a precision full scale AC current. Monitor the 8300 for 24 hours and check for a 10 digit or less change.

RESOLUTION

Select the AC current mode and the 10 range. Connect the 8300 to a precision AC current source. Apply an input of 10.000 milliamperes at 1 KH_z. Vary the input by precisely 1 microampere. The display should read this one digit change.

LINE VOLTAGE RANGE

The following line voltage tests are made around 115 volts AC 60 H_z. If the unit is to be used on 230 volts AC or other than 60 H_z, the test should be run at that voltage or frequency.

Connect the Variac to the 115 volts AC 60 H_z line. Connect the wattmeter/voltmeter to the output of the Variac and connect the 8300 to the wattmeter/voltmeter output. Apply a full scale input current to the 8300. Vary the line voltage from 105 to 125 volts AC and check for less than a 4 digit change in the reading.

DETAILED INSTRUCTIONS
FOR
PRINT – OUT
OPTION "P"
SUB – ASSY A15
CALICO P/N 8300 – 710

PRINT OUTPUT

The 8300-710 print-out board contains the signal buffering and delay circuits required for most small system requirement. A schematic diagram is contained on drawing E8300-080.

All outputs that are required to operate a conventional printer are available at the 50 pin output connector J1 located on the rear panel. All encoding and delay inputs and outputs are available at the 14 pin output connector J2 located on the rear panel.

PRINT COMMAND

The print command output, J1 Pin 48 and J2 Pin 2, is used to start the printing sequence in the printing device. The negative going print command occurs at the instant the new data has been transferred into the output storage register. See timing drawing Figure 1.

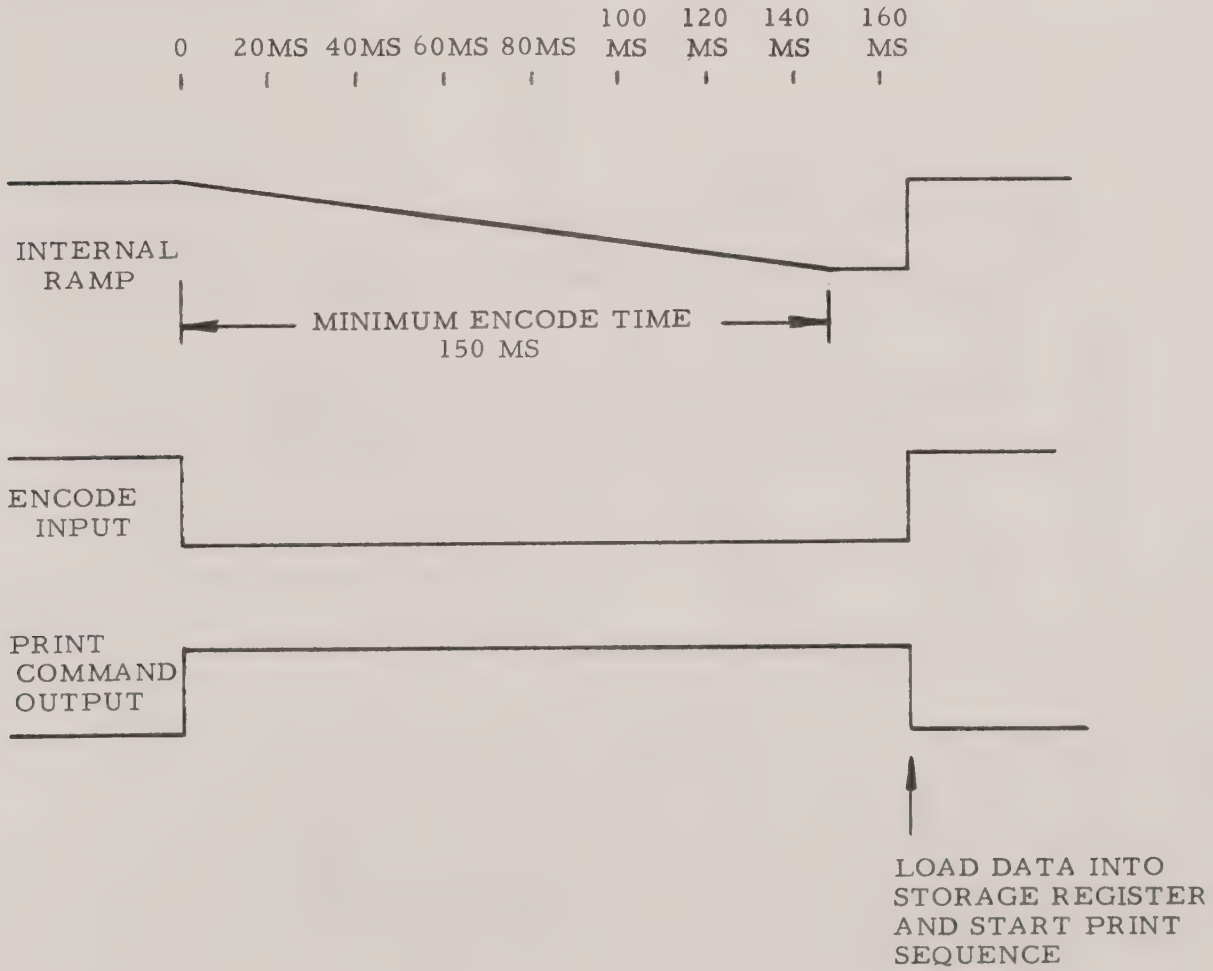

FIGURE 1

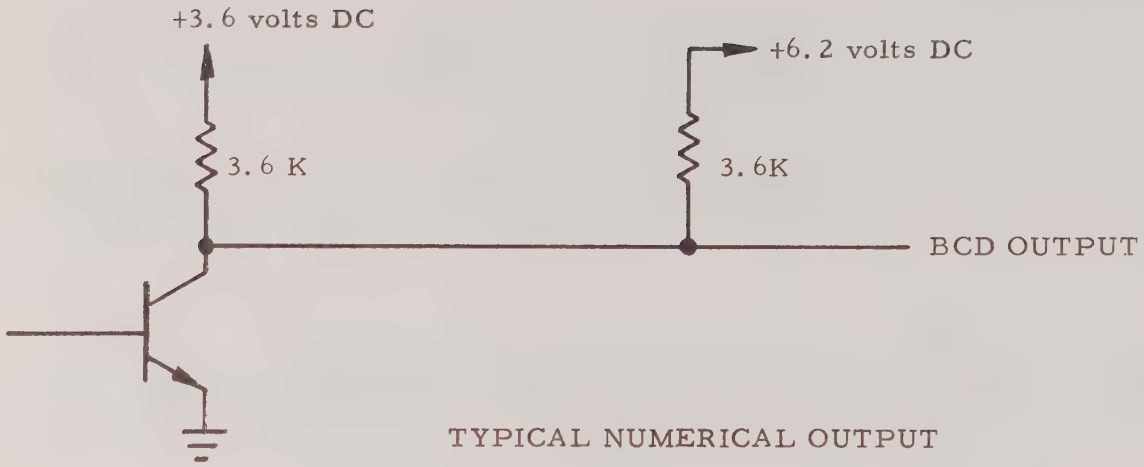

TYPICAL NUMERICAL OUTPUT

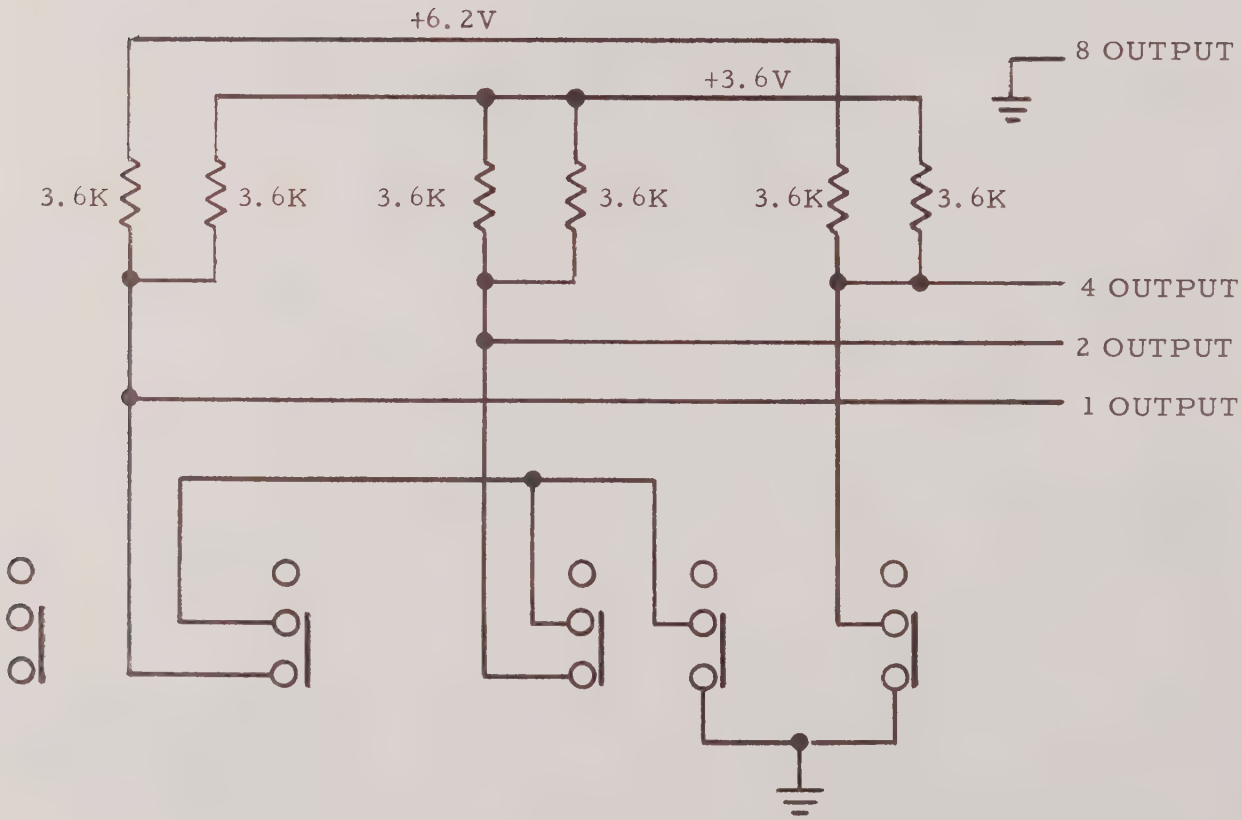

RANGE OR FUNCTION SWITCH

SIMPLIFIED SCHEMATIC

ENCODE INPUT

The encode cycle must have two time periods, an encode period and a restore period. The encode period is formed by driving J2 Pin 8 to ground. The restore period is formed by driving J2 Pin 8 positive. The encode period must be a minimum of 150 MS long. The restore period must be a minimum of 5 MS long.

Level limits:	Encode	0 volts ±.4 volts
	Restore	+2.7 volts ±.9 volts

The data gathered in the counters during the encode cycle is transferred into the storage register at the beginning of the restore cycle. It is, therefore, possible to gather and hold two sets of data in an 8300 simultaneously; one in the storage register being displayed and the other in the decode counters awaiting display.

DELAY CIRCUITS

The 8300-710 board contains two delay circuits; one fixed delay, the other a variable delay.

The fixed delay may be activated by pulsing J2 Pin 5 positive. As J2 Pin 5 goes positive J2 Pin 12 turns on to ground. After approximately 250 MS, J2 Pin 12 returns to the positive state.

The input to the variable delay is brought out at J2 Pin 4. To start the delay J2 Pin 4 should b driven to +3.6 volts and J2 Pin 9 must be pulsed positive. This delay can be set to hold off for several seconds before resetting, or set to hold off for only 200 MS before resetting. This adjustment is A15R48.

8300 PRINT OUTPUT
CODE SEQUENCE

The 8300 output code is "1-2-4-8" positive "1" state. The "1" state is +5 VDC ±10% at a source impedance of 1.8KΩ. The "0" state is 0VDC ±.4VDC at a maximum sink current of 5MA DC.

	NUMERICAL REPRESENTATION	BCD OUTPUT 1-2-4-8
TYPICAL DECADE	0	0 0 0 0
	1	1 0 0 0
	2	0 1 0 0
	3	1 1 0 0
	4	0 0 1 0
	5	1 0 1 0
	6	0 1 1 0
	7	1 1 1 0
	8	0 0 0 1
	9	1 0 0 1
RANGE SWITCH POSITION		
.1	0	0 0 0 0
1	1	1 0 0 0
10	2	0 1 0 0
100	3	1 1 0 0
1000	4	0 0 1 0
FUNCTION SWITCH POSITION		
Frequency	0	0 0 0 0
DC Volts	1	1 0 0 0
AC Volts	2	0 1 0 0
Current	3	1 1 0 0
Kilohms	4	0 0 1 0
POLARITY INDICATION		
-	1	1 0 0 0
+	2	0 1 0 0
No Polarity	3	1 1 0 0

REAR PANEL CONNECTOR "J1"
AMPHENOL BLUE RIBBON 50 PIN

PIN NUMBER	OUTPUT	
1	"1" BIT	UNITS DECADE
2	"2" BIT	
26	"4" BIT	
27	"8" BIT	
3	"1" BIT	TENS DECADE
4	"2" BIT	
28	"4" BIT	
29	"8" BIT	
5	"1" BIT	HUNDREDS DECADE
6	"2" BIT	
30	"4" BIT	
31	"8" BIT	
7	"1" BIT	THOUSANDS DECADE
8	"2" BIT	
32	"4" BIT	
33	"8" BIT	
9	"1" BIT - *	TEN THOUSANDS DECADE
10	"2" BIT	
34	"4" BIT	
35	"8" BIT	
11	"1" BIT	RANGE SWITCH
12	"2" BIT	
36	"4" BIT	
37	"8" BIT	
13	"1" BIT	FUNCTION SWITCH
14	"2" BIT	
38	"4" BIT	
39	"8" BIT	
15	"1" BIT	POLARITY OUTPUT
16	"2" BIT	
40	"4" BIT	
41	"8" BIT	
25	POSITIVE LOGIC REFERENCE	
48	PRINT COMMAND (DIRECT COUPLED)	
46	PRINT COMMAND (CAPACITIVE COUPLED)	
24	GROUND	
50	GROUND	

* ten thousands "1" bit may be used as a range exceeded indication to void data above 09999.

REAR PANEL CONNECTOR "J2"
AMPHENOL BLUE RIBBON 14 PIN

1	GROUND
2	PRINT COMMAND (NEGATIVE GOING)
3	ENCODE DRIVER OUTPUT
4	VARIABLE DELAY INPUT
5	FIXED DELAY RESET
6	FREQUENCY MODE INHIBIT
7	FIXED DELAY INVERTED OUTPUT
8	ENCODE INPUT
9	VARIABLE DELAY RESET
10	5 H_z TIME BASE OUTPUT
11	VARIABLE DELAY INVERTED OUTPUT
12	FIXED DELAY OUTPUT
13	+3.6 VOLT POWER SUPPLY
14	VARIABLE DELAY OUTPUT

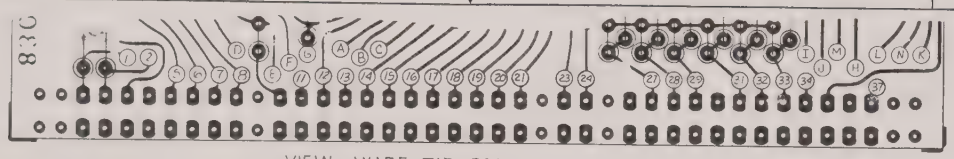

VIEW WIRE TIE POINTS
(SEE TABLES II & III)

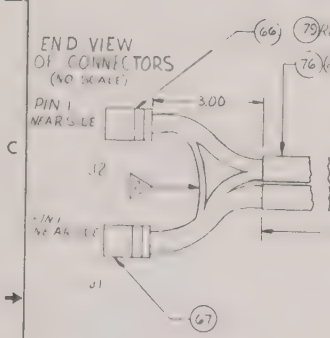

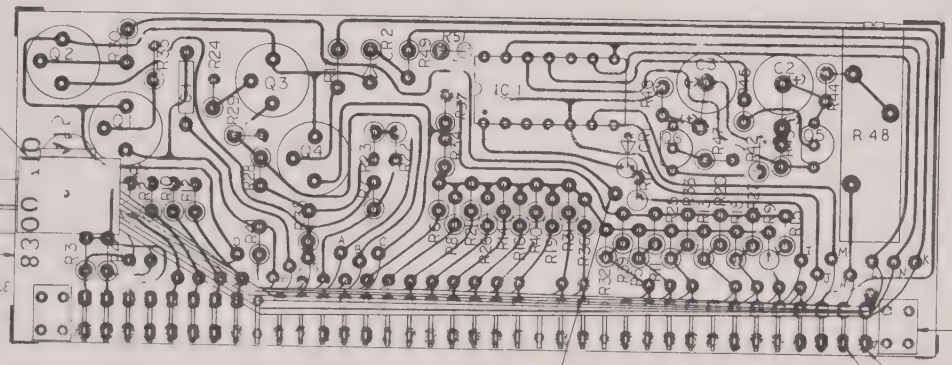

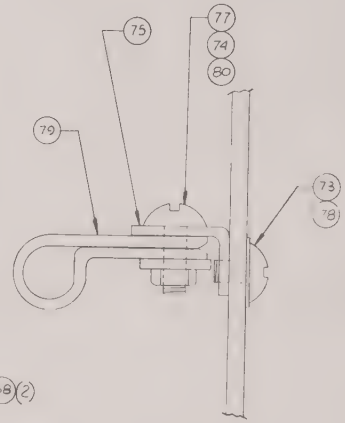

VIEW CABLE CLAMP INST.

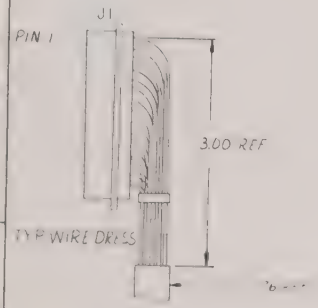

A15
-1 ASSEMBLY
VIEW COMPONENT SIDE

TABLE II 1

WIRE #	FROM	TO	COLOR	LENGTH
1	J1-50	J2-1	BRN	
2	J1-48	J2-2	RED	
3	A15-37	J2-3	ORN	
4	A15-H	J2-4	YEL	
5	A15-I	J2-5	GRN	
6	A15-11	J2-6	BLU	
7	A15-[illegible]	J2-7	VIO	
8	A15-13	J2-8	GRY	
9	A15-K	J2-9	WHT	
10	A15-34	J2-10	W/BLK	
11	A15-L	J2-11	W/GRN	
12	A15-M	J2-12	W/RED	
13	A15-12	J2-13	W/ORN	
[illegible]	A15-N	[illegible]	W/YEL	
[illegible]	A15-[illegible]	[illegible]	W/GRN	
16	[illegible]	[illegible]	W/BLU	
17	A15-33	[illegible]	W/VIO	
18	A15-29	J1-11	W/GRY	
19	[illegible]	[illegible]	W/BLU BRN	
20	[illegible]	[illegible]	W/BLU RED	
21	A15-G	J1-9	W/BLK/ORN	

TABLE III 3

WIRE #	FROM	TO	COLOR	LENGTH
22	A15-F	J1-46	W/BLK/YEL	
23	A15-E	J1-48	W/BLK/GRN	
24	A15-D	J1-10	W/BLK/BLU	
25	A15-A	J1-25	W/BLK/VIO	
26	A15-B	J1-16	W/BLK/GRY	
27	A15-C	J1-15	W/BRN/RED	
28	A15-2	J1-33	W/BRN/ORN	
29	A15-20	J1-32	W/BRN/GRN	
30	A15-24	J1-8	W/BRN/BLU	
31	A15-23	J1-7	W/BRN/VIO	
32	A15-17	J1-31	W/BRN/YEL	
33	A15-16	J1-30	BRN	
34	A15-15	J1-6	RED	
35	A15-18	J1-5	ORN	
36	A15-8	J1-29	YEL	
37	A15-7	J1-28	GRN	
38	A15-15	J1-4	BLU	
39	A15-14	J1-3	VIO	
40	A15-[illegible]	J1-27	GRY	
41	A15-[illegible]	J1-26	WHT	
42	A15-[illegible]	J1-2	W/BLK	
43	A15-[illegible]	J1-[illegible]	W/BRN	

TABLE I
JUMPER WIRE INST.

FROM	TO
J1-16	J1-34
J1-[illegible]	J1-[illegible]
J1-[illegible]	J1-[illegible]
J1-[illegible]	[illegible]
J1-[illegible]	[illegible] 40
J1-4[illegible]	[illegible] 41
J1-4[illegible]	[illegible] 24
J1-[illegible]	[illegible] 50

3 ALL WIRES ARE 24GA

2 WIRES J1-50 TO J2-1 & J1-48 TO J2-2.

1. FOR SCHEMATIC SEE DWG. NO. E 8300-080.

NOTES (UNLESS OTHERWISE SPECIFIED)

REV	AUTH	DESCRIPTION	ZONE	EFF ON	DATE	APRD

REVISIONS

REQD PER ASSY	ITEM NO	PART NUMBER	PART NAME	MATERIAL SPECIFICATION	CODE IDENT	FINISH	REF DES	ZONE
		PL8300-710	[illegible]	SHEETS 4,5 & 6				

DIM IN INCHES TOLERANCES .XXX ± .010 .XX ± .03 .X ± .02

BREAK ALL SHARP CORNERS & EDGES MATH SURFACES

DWG SIZE D

TITLE [illegible] BOARD (A15) BOARD ASSEMBLY

CALICO
CALIFORNIA INSTRUMENTS CORP
SAN DIEGO CALIFORNIA

CONTRACT NO

CODE IDENT 16067

DWG NO [illegible] REV 1

SCALE

SHEET 2 OF 6

D8300-710

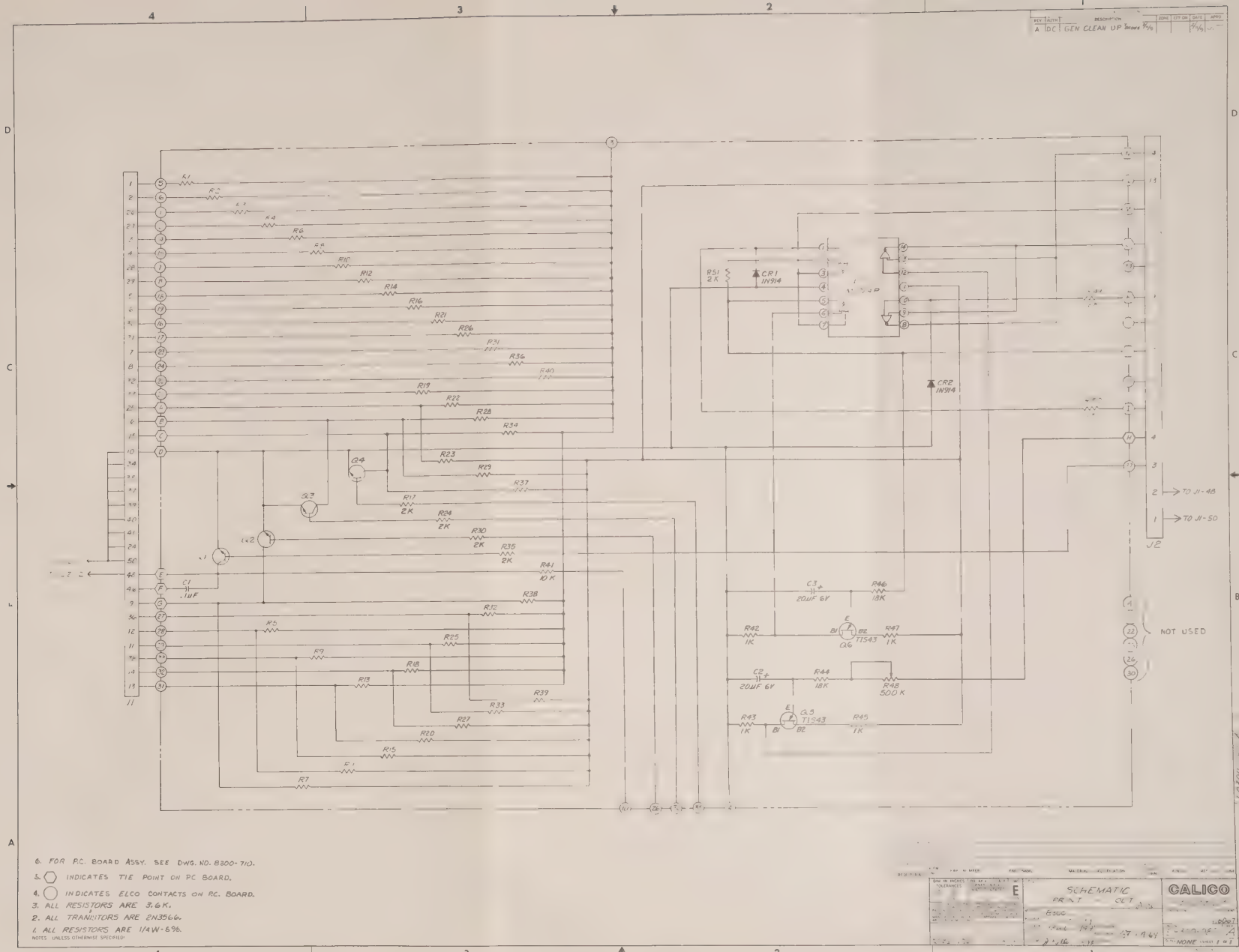

GEN CLEAN UP
R51 2K
CR1 1N914
CR2 1N914
Q4
Q3
Q2
Q6 TIS43
Q5 TIS43
C1 .1μF
C3 20μF 6V
C2 20μF 6V
R46 18K
R42 1K
R47 1K
R44 18K
R48 500 K
R43 1K
R45 1K
TO J1-48
TO J1-50
J2
NOT USED
6. FOR P.C. BOARD ASSY. SEE DWG. NO. 8300-710.
5. INDICATES TIE POINT ON P.C. BOARD.
4. INDICATES ELCO CONTACTS ON P.C. BOARD.
3. ALL RESISTORS ARE 3.6K.
2. ALL TRANSISTORS ARE 2N3566.
1. ALL RESISTORS ARE 1/4W-6%.
NOTES: UNLESS OTHERWISE SPECIFIED
SCHEMATIC
CALICO

CALICO CALIFORNIA INSTRUMENTS CORP. SAN DIEGO, CALIFORNIA | CODE IDENT 16067 | PARTS LIST

REF. DES.	MFG. NUMBER	DESCRIPTION	CODE IDENT	CALICO STOCK NUMBER	ITEM NO.
A15	8300-710	PRINT BOARD	16067		1
	-7	P.C. BOARD	16067	1-55044	2
					3
					4
A15C1	CK-104	CAPACITOR .1μf	71590	6-10129	5
A15C2	TE-1090	CAPACITOR 20μf 6V	56289	6-10345	6
A15C3	TE-1090	CAPACITOR 20μf 6V	56289	6-10345	7
					8
A15CR1	IN914	DIODE	JEDEC	3-10118	9
A15CR2	IN914	DIODE	JEDEC	3-10118	10
					11
A15IC1	MC 724P	I.C.	04713	3-30111	12
					13
A15R1	RC07GF362J	RESISTOR 3.6K 1/4W 5%	JEDEC	5-10065	14
A15R2	RC07GF326J	RESISTOR 3.6K 1/4W 5%	JEDEC	5-10065	15
A15R3	RC07GF326J	RESISTOR 3.6K 1/4W 5%	JEDEC	5-10065	16
A15R4	RC07GF326J	RESISTOR 3.6K 1/4W 5%	JEDEC	5-10065	17
A15R5	RC07GF326J	RESISTOR 3.6K 1/4W 5%	JEDEC	5-10065	18
A15R6	RC07GF326J	RESISTOR 3.6K 1/4W 5%	JEDEC	5-10065	19
A15R7	RC07GF326J	RESISTOR 3.6K 1/4W 5%	JEDEC	5-10065	20
A15R8	RC07GF326J	RESISTOR 3.6K 1/4W 5%	JEDEC	5-10065	21
A15R9	RC07GF326J	RESISTOR 3.6K 1/4W 5%	JEDEC	5-10065	22
A15R10	RC07GF326J	RESISTOR 3.6K 1/4W 5%	JEDEC	5-10065	23
A15R11	RC07GF326J	RESISTOR 3.6K 1/4W 5%	JEDEC	5-10065	24
A15R12	RC07GF326J	RESISTOR 3.6K 1/4W 5%	JEDEC	5-10065	25
A15R13	RC07GF326J	RESISTOR 3.6K 1/4W 5%	JEDEC	5-10065	26
A15R14	RC07GF326J	RESISTOR 3.6K 1/4W 5%	JEDEC	5-10065	27
A15R15	RC07GF326J	RESISTOR 3.6K 1/4W 5%	JEDEC	5-10065	28
A15R16	RC07GF326J	RESISTOR 3.6K 1/4W 5%	JEDEC	5-10065	29
A15R17	RC07GF202J	RESISTOR 2K 1/4W 5%	JEDEC	5-10059	30
A15R18	RC07GF326J	RESISTOR 3.6K 1/4W 5%	JEDEC	5-10065	31
A15R19	RC07GF326J	RESISTOR 3.6K 1/4W 5%	JEDEC	5-10065	32
A15R20	RC07GF326J	RESISTOR 3.6K 1/4W 5%	JEDEC	5-10065	33
A15R21	RC07GF326J	RESISTOR 3.6K 1/4W 5%	JEDEC	5-10065	34
A15R22	RC07GF326J	RESISTOR 3.6K 1/4W 5%	JEDEC	5-10065	35
A15R23	RC07GF326J	RESISTOR 3.6K 1/4W 5%	JEDEC	5-10065	36

MODEL 8300 | CALICO P/N 8300-710 | ASSY R.O. A15

TITLE PRINT BOARD | SHT 4 OF 6

CALICO CALIFORNIA INSTRUMENTS CORP. SAN DIEGO, CALIFORNIA | CODE IDENT 16067 | PARTS LIST

REF. DES.	MFG. NUMBER	DESCRIPTION	CODE IDENT	CALICO STOCK NUMBER	ITEM NO.
A15R24	RC07GF202J	RESISTOR 2K 1/4W 5%	JEDEC	5-10059	37
A15R25	RC07GF362J	RESISTOR 3.6K 1/4W 5%	JEDEC	5-10065	38
A15R26	RC07GF362J	RESISTOR 3.6K 1/4W 5%	JEDEC	5-10065	39
A15R27	RC07GF362J	RESISTOR 3.6K 1/4W 5%	JEDEC	5-10065	40
A15R28	RC07GF362J	RESISTOR 3.6K 1/4W 5%	JEDEC	5-10065	41
A15R29	RC07GF362J	RESISTOR 3.6K 1/4W 5%	JEDEC	5-10065	42
A15R30	RC07GF202J	RESISTOR 2K 1/4W 5%	JEDEC	5-10059	43
A15R31	RC07GF362J	RESISTOR 3.6K 1/4W 5%	JEDEC	5-10065	44
A15R32	RC07GF362J	RESISTOR 3.6K 1/4W 5%	JEDEC	5-10065	45
A15R33	RC07GF362J	RESISTOR 3.6K 1/4W 5%	JEDEC	5-10065	46
A15R34	RC07GF362J	RESISTOR 3.6K 1/4W 5%	JEDEC	5-10065	47
A15R35	RC07GF202J	RESISTOR 2K 1/4W 5%	JEDEC	5-10059	48
A15R36	RC07GF362J	RESISTOR 3.6K 1/4W 5%	JEDEC	5-10065	49
A15R37	RC07GF362J	RESISTOR 3.6K 1/4W 5%	JEDEC	5-10065	50
A15R38	RC07GF362J	RESISTOR 3.6K 1/4W 5%	JEDEC	5-10065	51
A15R39	RC07GF362J	RESISTOR 3.6K 1/4W 5%	JEDEC	5-10065	52
A15R40	RC07GF362J	RESISTOR 3.6K 1/4W 5%	JEDEC	5-10065	53
A15R41	RC07GF103J	RESISTOR 10K 1/4W 5%	JEDEC	5-10076	54
A15R42	RC07GF102J	RESISTOR 1K 1/4W 5%	JEDEC	5-10053	55
A15R43	RC07GF102J	RESISTOR 1K 1/4W 5%	JEDEC	5-10053	56
A15R44	RC07GF183J	RESISTOR 18K 1/4W 5%	JEDEC	5-10082	57
A15R45	RC07GF102J	RESISTOR 1K 1/4W 5%	JEDEC	5-10053	58
A15R46	RC07GF183J	RESISTOR 18K 1/4W 5%	JEDEC	5-10082	59
A15R47	RC07GF102J	RESISTOR 1K 1/4W 5%	JEDEC	5-10053	60
A15R48	2387-500K	POT 500K	91637	5-70094	61
A15R49	RC07GF202J	RESISTOR 2K 1/4W 5%	JEDEC	5-10059	62
A15R50	RC07GF202J	RESISTOR 2K 1/4W 5%	JEDEC	5-10059	63
A15R51	RC07GF202J	RESISTOR 2K 1/4W 5%	JEDEC	5-10059	64
					65
	57-40140	RECEPTACLE	02660	4-10110	66
	57-40500	RECEPTACLE	02660	4-10024	67
	62-5204-40-12	GUIDE SOCKET	91662	2-40315	68
	02-019-372-5-200	ELCO PIN (UPPER TIER)	91662	2-40305	69
	02-018-332-5-200	ELCO PIN (LOWER TIER)	91662	2-40306	70
					71
					72

MODEL 8300 | CALICO P/N 8300-710 | ASSY R.O. A15

TITLE PRINT BOARD | SHT 5 OF 6

CALICO CALIFORNIA INSTRUMENTS CORP. SAN DIEGO, CALIFORNIA | CODE IDENT 16067 | PARTS LIST

REF. DES.	MFG. NUMBER	DESCRIPTION	CODE IDENT	CALICO STOCK NUMBER	ITEM NO.
	6-32 5/32 LG.	SCREW, PAN HEAD			73
	#6	WASHER, FLAT			74
	129515	BRACKET	73734		75
	1/4 ID	NYLON TUBING			76
	6-32 3/8 LG.	SCREW, PAN HEAD			77
	#6	WASHER, INT. STAR.			78
	833	CABLE CLAMP	83330		79
	6-32	HEX NUT			80
					81
A15Q1	2N3566	TRANSISTOR	02335	3-30091	82
A15Q2	2N3566	TRANSISTOR	02335	3-30091	83
A15Q3	2N3566	TRANSISTOR	02335	3-30091	84
A15Q4	2N3566	TRANSISTOR	02335	3-30091	85
A15Q5	TIS43	TRANSISTOR	01295	3-30131	86
A15Q6	TIS43	TRANSISTOR	01295	3-30131	87

MODEL 8300 | CALICO P/N 8300-710 | ASSY R.O. A15

TITLE PRINT BOARD | SHT 6 OF 6

MP MASTER
MA28067